PUBLIC VERSION

UNITED STATES INTERNATIONAL TRADE COMMISSION
WASHINGTON, DC

Before the Honorable David P. Shaw
Administrative Law Judge

In the Matter of **CERTAIN AUDIOVISUAL COMPONENTS AND PRODUCTS CONTAINING THE SAME**	**Investigation No. 337-TA-837**

FUNAI RESPONDENTS'[1] RESPONSE TO THE NOTICE OF COMMISSION DETERMINATION TO REVIEW A FINAL INITIAL DETERMINATION FINDING A VIOLATION OF SECTION 337 IN ITS ENTIRETY; SCHEDULE FOR FILING WRITTEN SUBMISSIONS ON CERTAIN ISSUES UNDER REVIEW AND ON REMEDY, BONDING, AND THE PUBLIC INTEREST

****

BRIEF ON DISCRETE ISSUES

Paul Devinsky
Ray V. Lupo
Christopher L. May
McDERMOTT WILL & EMERY
The McDermott Building
500 North Capitol Street, Northwest
Washington, DC 20001
Telephone: (202) 756-8000
Facsimile: (202) 756-8087

Christopher D. Bright
McDERMOTT WILL & EMERY
4 Park Plaza, Suite 1700
Irvine, CA 92614-2559
Telephone: (949) 851-0633
Facsimile: (949) 851-9348

Counsel for Respondents Funai Corporation,Inc., Funai Electric Co., Ltd., P&F USA,Inc.,and Funai Service Corporation

[1] Funai Electric Co., Ltd., Funai Corporation, Inc., P&F USA, Inc. and Funai Service Corporation.

TABLE OF CONTENTS

TABLE OF AUTHORITIES

Page(s)

CASES

STATUTES

OTHER AUTHORITIES

I. Introduction

Respondents Funai Electric Co., Ltd., Funai Corporation, Inc., P&F USA, Inc., and Funai Service Corporation (collectively, "Funai") hereby submit their initial submission in response to the Notice of Commission Determination to Review a Final Initial Determination Finding a Violation of Section 337 in its Entirety (October 17, 2013).[2] In its October 17 Notice, the Commission asked the parties to brief several questions related to the ALJ's finding of infringement (for the '087 patent) and noninfringement (for the '663 patent), as well as the priority date and invalidity of the '958 patent. In addition, the Commission's Notice also raises questions implicating important policy issues concerning standards essential patents and the domestic industry requirement that the Commission has wrestled with in other recent investigations. This Investigation presents an opportunity for the Commission to clarify the law with respect to these issues. The evidence of record fully supports the ALJ's conclusions that there has been no Section 337 violation in connection with the '958, the '867, and the '663 patents. The Commission, however, should reverse the ALJ's erroneous finding of infringement as to the '087 patent, as well as the ALJ's flawed conclusion that Complainants satisfied the domestic industry requirement.

Questions 1-3, and part of question 7, are directed to the issue of direct and indirect infringement as to the '087 patent. As explained herein, the record evidence fully supports the conclusion that the '087 patent described and claims a video decoder that uses a single memory. If multiple memories are considered to be a single memory or memory functioning as a unit, then there is no invention even claimed in the '087 patent. Moreover, even if the '087 patent covers devices using multiple memories, the evidence in the record (including testimony from the experts as well as engineers who designed the accused chips) supports the conclusion that the two (or four) DRAMs as used in the various accused Funai downstream products are neither a single memory nor do they

[2] Funai's initial submission on remedy, the public interest, and bonding will be filed as a separate document concurrently with this filing.

function as a unit. This is insufficient to prove direct infringement of the '087 patent, and the Commission should accordingly reverse the ALJ's finding of infringement. *See* Section I (response to Question 1). Furthermore, the evidence in the record is insufficient to prove indirect infringement because there is no evidence showing that Funai was aware that any of its acts infringed the '087 patent prior to LSI's lawsuit; nor is there evidence showing that Funai actively or knowingly aid users to practice the asserted claims. *See* Section II (response to Questions 2, 3, and 7(a)).

Questions 4-6, and the other part of question 7, are directed to the issues of claim construction and infringement as to the '663 patent. The ALJ correctly found that not a single limitation of claims 1 and 11, as properly construed, was infringed by the accused Funai downstream products. The ALJ's construction of the claims, which includes requirement that the recited steps must be performed sequentially, is fully supported by the intrinsic evidence, and there is no evidence to support a finding of infringement literally or under the doctrine of equivalents by Funai's downstream products. *First*, the accused and undisputed functionality—[redacted]—is outside the scope of the plain meaning of step (A) (or element (i)) of claims 1 and 11, which require setting the index to a threshold "in response to" receiving a complete first pattern. *Second*, the accused products never add the claimed "offset" to the index value, either literally or under the doctrine of equivalents, as required by step (B) (or element (ii)) of claims 1 and 11. *Third*, the accused products never add the claimed "value" to the index value, either literally or under the doctrine of equivalents, as required by step (C) (or element (iii)) of claims 1 and 11. These three findings are all supported by the great weight of the record evidence. *See* Section III (response to Question 4). Moreover, as with the '087 patent, there is no evidence showing that Funai was aware that the accused acts infringed the '663 patent prior to LSI filing suit, and Funai does not actively and knowingly aid users of its products to practice the claims of the '663 patent. Moreover, the record does not show that third parties practice each step of claims 1-9 of the '663 patent. Thus,

there is no evidence to support a finding of indirect infringement. *See* Section IV (response to Questions 5, 6, and 7(b)).

With respect to the '958 patent, the ID erroneously concludes that the priority date of the asserted claims is July 30, 1996. However, consistent with Agere's stipulation in the prior litigation with Sony, the priority date for the asserted claims of the '958 patent is no earlier than April 22, 1998. The record evidence also shows that the asserted claims of the '958 patent are invalid as being anticipated or rendered obvious by the prior art, including the Prasad, the Harris proposal, van Nee, Proakis, and Weather references. *See* Section V (response to Questions 8 and 9). Furthermore, the record evidence supports the conclusion that U.S. Patent Application No. 08/155,661 was abandoned in December 2001 because the applicant failed to file a reply to the Office Action mailed on June 7, 2001 within the six-month statutory deadline. *See* Section VI (response to Question 10).

The Commission's notice also requests a discussion and citation of any record evidence of the "standard essential nature" of the '663, the '958, and the '867 patents. Complainants have asserted that the '958 and '867 patents are infringed simply by practicing different aspects of the IEEE 802.11 standard. Additionally, Complainants have asserted that the '663 patent is infringed simply by practicing the H.264 standard. Based on their representations in this litigation as well as declarations and assurances filed with the standard setting bodies, Complainants should be judicially estopped from claiming the '663, the '958, and the '867 patents are not standard essential. However, the ID correctly recognized that practicing the 802.11 or the H.264 standards will not necessarily result in the infringement of the asserted claims. *See* Section VII (response to Question 11).

Finally, the statutory language plainly requires proof of "articles protected by the patent" (*i.e.*, a technical prong) for any type of domestic industry, including one based on licensing investments under 19 U.S.C. § 1337 (a)(3)(C). This interpretation not only consistent with the legislative history and the Commission's early interpretation of the statutory language, it has also

been more recently endorsed by the Federal Circuit. Complainants altogether failed to prove this critical statutory requirement for the licensing domestic industry they alleged in this Investigation. Accordingly, in addition to Complainant's insubstantial investments and failure to breakdown those investment for the specific asserted patents, Complainant's failure to prove "articles protected by" any of the asserted patents presents another reason to reverse the ALJ's conclusion that the domestic industry requirement is satisfied. *See* Section VII (response to Question 12).

II. Question 1

> **What evidence in the record supports or does not support the conclusion that the two DRAMs in each of the Funai products accused of infringing the '087 patent is a single memory having one or more memory chips? With respect to each of the Funai products accused of infringing the '087 patent, what evidence in the record supports or does not support the conclusion that the two DRAMs used by the transport logic, MPEG decoder and system controller function as a unit? To the extent that each Funai product includes a flash memory, what code and/or data is stored in the flash memory and does the flash memory function as a unit with the two DRAMs?**

Most importantly, on its face the '087 patent describes and claims a video decoder that uses a single memory. If multiple memories are considered to be single memory or memory functioning as a unit, then there is no invention even claimed in the '087 patent. Moreover, even if the '087 patent covers devices using multiple memories, the evidence in the record supports the conclusion that the two (or four) DRAMs as used in the various accused Funai downstream products are neither a single memory nor do they function as a unit. This conclusion is supported by both expert testimony and by the testimony of engineers who designed the accused decoder chips. In fact, the only evidence submitted by Complainants in support of their contention that the multiple DRAMs and flash memory found in the accused products are a single memory, or a memory functioning as a unit, is a theoretical construct of operation that is different from how the decoders in the accused products actually operate. This is insufficient to prove infringement.

The evidence further supports the conclusion that the flash memory does not function as a unit with the two (or four) DRAMs because the flash memory performs specific functions separate from the DRAMs. The flash memory is not simply additional memory that can somehow be combined with the DRAMs. Rather, the flash memory performs distinct functions. In sum, neither the two (or four) DRAMs alone, nor the flash memory plus the DRAMs, are neither a single memory nor memory functioning as a unit.

A. The '087 Patent Itself Demonstrates that Multiple DRAM and Flash Memories Cannot be a "Single Memory" or "Function as a Unit"

The primary evidence relating to the proper scope of '087 Patent – the patent itself – unambiguously describes the invention as covering the use of a single memory and not multiple memories, nor memories that "function as a unit." The only alleged point of novelty in the ’087 patent[3] is the use of a single memory (instead of multiple memories as used in the prior art) to perform various functions of an MPEG video decoder system. The patent itself states, “[t]he present invention thus requires only a single memory, and has reduced memory requirements compared to prior art designs.” (JX-0001 at 5:6-10.) This language manifestly excludes from the scope of the patent any devices that use multiple memories because such use would merely be practicing the prior art. *SafeTCare Manufacturing, Inc. v. Tele-Made, Inc.*, 497 F.3d 1262, 1269-70 (Fed. Cir. 2007) (finding that the patent disclaimed use of a pulling force because the specification stated that the prior art used a pulling force). For this reason alone, the two (or four) DRAMS and flash memory used by the decoder chips in the accused Funai products are neither a "single memory" nor a memory that "functions as a unit” because use of multiple memories is defined by the ‘087 patent as practicing the prior art.

The claims language also requires that the memory be a “single memory.” The claim limiting preambles of the three asserted independent claims are as follows:

[3] The evidence also has shown that this alleged point of novelty is not in fact novel. (RX-0007C.37-543.)

> 1. An MPEG decoder system ***which includes a single memory*** for use by the transport, decode and system controller functions, comprising:
> …
> 10. A method for performing video decoding in an MPEG decoder system ***which includes a single memory*** for use by transport, decode and system controller functions, the method comprising:
> …
> 16. A video decoder system ***which includes a single memory*** for use by transport, decode, and system controller functions, comprising:

(JX-0001 at 17:15-20:6. (emphasis added).) Therefore, to conclude that use of multiple memories falls within the scope of these claims would ignore the precept of claim construction that "the claims themselves provide substantial guidance." *Phillips v. AWH Corp.*, 415 F. 3d 1303, 1314 (Fed. Cir. 2005).

Finally, the use of the word "unified" in the '087 patent refers to the unification of the storage requirements for the MPEG decoder system's transport logic, system controller, and video decoder. It does not refer to the use of multiple memories in some nebulous "unified" fashion as Complainants assert. First, it is nonsensical to expressly claim an invention that purports to service multiple decoder functions using a "single" memory and then assert that the '087 patent does not even require use of a single memory. Second, throughout the '087 patent, without exception, the written description consistently refers to a unification (into a single memory) of storage for the relevant components of an MPEG decoder; for example:

- "The video decoding system of the present invention includes a single unified memory which stores code and data for the transport, system controller and MPEG decoder functions." (JX-0001 at Abstract, 11:15-18; 17:2-5.)
- "The present invention comprises an MPEG decoder system and method for performing video decoding or decompression which includes a unified memory for multiple functions according to the present invention." (JX-0001 at 4:65-5:1.)

Therefore, the intrinsic evidence confirms that the patentee used the word "unified" to refer to a unification of storage (into a single memory) to service the transport logic, video decoding and system controller functions. In contrast, there is not a single instance where the patent refers to multiple memories or memory in the plural. (JX-0001.) The idea that the '087 patent covers

products with multiple memories simply has no support in the intrinsic evidence. Indeed, the '087 patent provides no guidance as to how multiple memories would even function as a "single memory." (*Id.*)

Complainants contend that the depiction of memory component 212 in Fig. 3 and Fig. 4 of the '087 patent, as shown below, supports their contention that the patent covers devices with multiple memories.

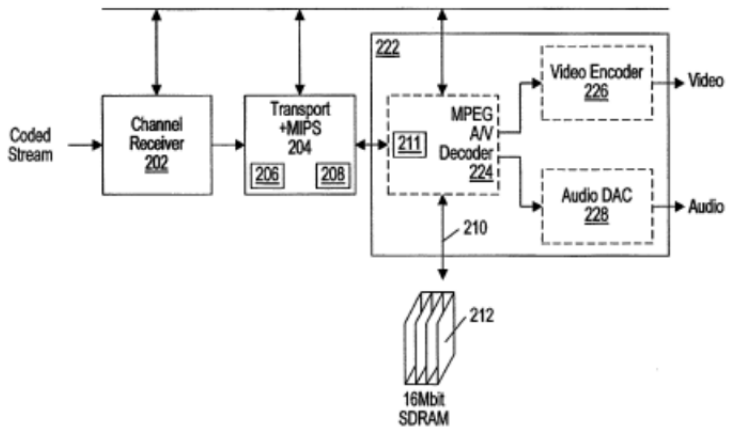

FIG. 3

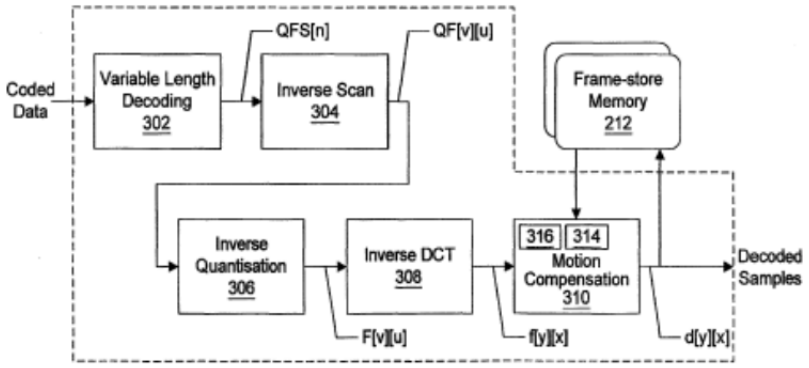

FIG. 4

Complainants' contention is without merit. As the evidence has shown, memory component 212 depicted in the above figures is not a depiction of multiple memories but simply a depiction of

multiple banks within a single memory, or a depiction of multiple reference frames. First, the patent states that memory component 212 is a single memory, "such as Samsung KIVI416S1120AT-12." (JX-0001 at at 12:57-60.) Nowhere does the patent ever describe memory component 212 as representing multiple memories. Second, the '087 patent itself describes that memory 212 relates to the storing of multiple frames, not multiple memories:

> The MPEG A/V decoder **224** utilizes the external memory **212** in the MPEG decode process. Thus the MPEG A/V decoder **224** uses the same memory **212** as the transport and system controller blocks. As is well-known in the art, the MPEG A/V decoder **224** uses ***the external memory 212 to store decoded reference frames or anchor frames which are used during motion compensation or reconstruction of temporally compressed frames***. The MPEG A/V decoder **224** may also use the external memory **212** to store a portion or all of the reconstructed frames.

JX-0001 at 9:11-20 (emphasis added). Therefore, because the specification states that structure 212 is a single 1Mx16 SDRAM Samsung chip and is used "to store decoded reference frames," the depiction in Figs. 3 and 4 is of multiple reference frames, not multiple chips or ranks.[4] This accords with expert testimony from both sides. Respondents' expert Dr. Schonfeld testified that "the name 'frame store memory' and the description in the '087 patent specification suggest that component 212 is illustrating the ability to store two reference frames for motion compensation." RX-2814C at QA 11 at RX-2814C.0014. And even Complainants' expert Dr. Acton testified on cross-examination that the only example of an actual memory was the single chip Samsung device:

> Q. Okay. In fact, as we agreed, the only concrete examples of an actual memory was that single chip Samsung device, correct?
>
> A. That was one embodiment yes.

Hg. Tr.(Acton) at 495:13-23. Dr. Acton further admitted that frame-store memory 212 stores and sends at least two frames:

[4] Moreover, the '087 patent at Figs. 6A and 6B actually describe that memory partition, as does Fig. 9. JX-0001 at Figs. 6A, 6B, and 9.

> Q. Okay. So the frame store memory would be sending either the prior decoded frame or a future decoded frame back to the motion compensation block?
>
> A. Or a portion thereof.
>
> Q. Or a portion thereof, okay. And so when we're talking about decoding B frames, that frame store memory 212 needs to send two frames to the motion compensation block, right?
>
> A. It needs to send at least the two blocks of the, of, that corresponded to different frames, yes.

Hg. Tr.(Acton) at 500:24-501:10. Therefore, Complainants' contention that Fig. 3 and Fig. 4 depict multiple memories is unsupported by not only the intrinsic evidence but by their own expert's admissions.

Additional evidence further supports that memory component 212 does not represent multiple memories. For example, Dr. Schonfeld testified that a person of ordinary skill in the art at the time of the alleged invention would understand the depiction of memory component 212 in Fig. 3 and Fig. 4 to be a depiction of memory partitions in a single chip, not four memory chips. (RX-2814C (Schonfeld RWS) at Q&A 11.) As Dr. Schonfeld explained, in 1996, at the time of the alleged invention, most SDRAMs in the market divided the data storage area in multiple internal data banks, allowing the single memory chip to handle multiple memory access commands at the same time. (*Id.*) Thus, the overwhelming evidence submitted by the parties, including the admissions of Complainants' own expert, demonstrates that memory component 212 does not represent multiple memories.

If the point of alleged novelty is removed from the patent by allowing the claims to cover devices with multiple memories, then there is simply no invention. Therefore, the '087 patent alone is sufficient evidence to demonstrate that the two DRAMs and flash memory used by the accused Funai products are neither a "single memory" nor a memory that "functions as a unit."

B. The Record Evidence Demonstrates that the Multiple DRAMs are Not a "Single Memory"

It is undisputed that the accused downstream products [redacted]. The relevant documentation for each of the accused products plainly describes [redacted]. For example, as illustrated below, the Funai [redacted]:[5]

[redacted]

The disjunction between Complainants' contention that the '087 patent covers devices with multiple memories and the text of the patent itself is highlighted by the fact that if devices with multiple memories infringe, then there is no limit on the number of memories that are covered by the patent. For example, many of the accused products contain [redacted]:

[5] The other accused products- [redacted] (RX-2814C at Q.47, Q. 74, Q. 101, Q. 128).

(CX-0510C.008.) As the circuit diagram makes clear, .[6] If the "single memory" claimed by the '087 patent is held to cover two, four, or any number of memories, then there is in fact no invention at all.

Furthermore, Complainants' expert Dr. Acton agreed at the evidentiary hearing that all of the products which he analyzed :

(Hg. Tr. (Acton) at 534:20-25.) Therefore, there is no dispute that all of the accused products contain multiple memories.

Even if the '087 patent claims are construed to cover use of multiple memories (contrary to the patent's unequivocal statement that the use of multiple memories is practicing the prior art), the

[6] Other accused products such as the (*See, e.g.,* CX-0560C.0025).

testimony of both fact and expert witnesses demonstrates that these multiple memories are not a "single memory." Rather, the evidence shows that the accused Funai products use the multiple DRAMs distinctly.

1. Witness testimony demonstrates that multiple distinct DRAM memories are required for operation of the Accused Funai products.

At the hearing, Funai's expert Dr. Schonfeld testified that multiple DRAMs in the accused downstream products are not a single memory and do not function as a unit. (RX-2814C.0032-35.) For example, Dr. Schonfeld testified that [redacted] (*Id.*) Dr. Schonfeld also pointed to Complainants' expert Dr. Acton's own understanding of what a single memory (or memory functioning as a unit) would entail: [redacted] (*Id.*) In fact, during his rebuttal testimony, Dr. Acton testified that the C-Cube prior art reference did not read on the '087 claims because it contained three memories, and [redacted] (CX-1640C.0074) Thus, under Complainants' expert's own definition of single memories, there is not an iota of evidence that the accused products have a single memory or memories that functions as a unit.

Specifically, Complainants submitted no evidence that the multiple DRAMs and flash memory of each of the accused products have identical addressing mechanisms, identical word sizes, non-overlapping addresses, and distinct address ranges to support their burden to show infringement. (RX-2814C.0035; CX-1594C.0038-39.)[7] In contrast to the lack of evidence submitted by Complainants to support their contention that the two DRAMs used [redacted] function as a single memory, Funai submitted the testimony of Yu-Hau Chen,

[7] In fact, Complainants' infringement analysis failed to address any of Dr. Acton's criteria to show that the multiple memories "function as a unit."

the MediaTek employee who was previously responsible for the design of the software system structure for the [redacted] microprocessors. Mr. Chen described how the two DRAMs are [redacted]. For example, Mr. Chen described how the [redacted]:

[redacted]

(JX-0018C at 27:9-17 (objections removed).) If the two DRAMs were functioning as a "single memory" – *e.g.*, two memories that are simply part of a greater whole – then it would make no sense [redacted] Accordingly, as Dr. Schonfeld testified, [redacted] demonstrates that the Funai products do not have a single memory or a memory functioning as a unit. (RX-2814C.0034-34.)

This is further supported by additional testimony. When asked why [redacted] If the [redacted] was using the DRAMs in a unified manner without regard to their being separate memories, then there would be no need to [redacted] Precisely because there is such a need, the DRAMs are not used in a unified fashion.

Furthermore, when asked, [redacted], Mr. Chen testified that this was a misstatement: [redacted] (JX-0018C at 32:1-9.) Just as there would be no reason [redacted] if they were used as a "single memory," there

would also be no reason [redacted]

Other fact witnesses also testified that the multiple memories of the [redacted] do not function as a single memory. For example, Shih Hsin Tai, an engineer who works on the RTL code for the [redacted], testified at his deposition that [redacted]. (JX-0050C at 54:20-23, 55:1-18, 20-25.) As Dr. Schonfeld testified, [redacted] (RX-2814C.0034-35.)[8]

In sum, even under Complainants' self proclaimed definition, using multiple DRAM memories in a unified manner would entail use of identical addressing mechanisms, identical word sizes, non-overlapping addresses, and distinct address ranges. But Complainants have put forth no evidence that the multiple DRAMs used by the accused products operate in this fashion. Indeed, they do not. In fact, the evidence shows exactly the opposite. Far from being agnostic to which DRAM memory they use, [redacted].

2. Complainant's theoretical operation construct lacks merit and should be rejected.

Because Complainants could not rely on the product documentation or witness testimony to support their theory that the multiple DRAMs used in the accused products operate as a single memory, Complainants were forced to rely on a theoretical argument. But whether the accused Funai downstream products infringe must depend on how the accused products <u>actually</u> operate, not how they might operate in theory if the source code were re-written. *Ball Aerosol & Specialty*

[8] The evidence was similar for the other accused Funai products. *See, e.g.*, RX-2814C at Q.47, Q. 74, Q. 101, Q. 128; CX-1594C at Q. 169, Q. 242, Q. 284, Q. 319, Qs. 353-54.

Container, Inc. v. Limited Brands, Inc., 555 F.3d 984, 994-995 (Fed. Cir. 2009) ("That the Travel Candle was reasonably capable of being put into the claimed configuration is insufficient for a finding of infringement.). Specifically, in order to overcome the evidence that the Funai products use multiple memories, Complainant's expert Dr. Acton opined, [redacted] (CX-1594C at Q.177; CX-0509C at 6.) To support this theory of infringement, Dr. Acton cited to page 43, lines 10-23 of Mr. Chen's testimony and opined that because [redacted] (CX-1594C at Q. 177; CX-0509C at 6.) Mr. Chen, however, was answering a theoretical question in the abstract. His complete testimony confirms that [redacted]:

[redacted]

(JX-0018C at 42:9-43:23 (objections deleted).)

Complainants' attempt to show theoretical infringement should be rejected. Even if the products could theoretically use a single DRAM, Complainants have not submitted any evidence to show that that theoretical possibility ever occurs. On the other hand, the submitted evidence shows that . While Mr. Chen said it theoretically "could be the case" that his testimony on the actual operation of the chips was Therefore, (*Id.*; RX-2814C.0035.) Mr. Chen's testimony of actual operation should not be trumped or ignored in favor of testimony of theoretical operation. To do so would place no boundaries on the scope of the '087 patent and simply cover demultiplexing, decoding and controlling processes using multiple memories as described by the prior art.

C. Witness Testimony Demonstrates that the Multiple DRAMs are not a Single Memory and do not "Function as a Unit."

For the same reasons described above that the multiple DRAMs of the accused products do not function as a "single memory," they also do not "function as a unit." Specifically, the evidence demonstrates that (RX-2814C.0035.) Nor do the various memories used by decoder chips function as a unit given there are multiple memory controllers – as Mr. Chen testified for the . (JX-0018C at 32:1-9.)

Moreover, as discussed above, each of the asserted independent claims describe "an MPEG decoder system which includes a single memory for use by the transport, decode and system controller functions…" (JX-0001 at 17:15-20:6 (emphasis added)). To hold that the word "single" covers multiple memories would simply be ignoring the words of these claims. "Allowing a patentee to argue that physical structures and characteristics specifically described in a claim are merely superfluous would render the scope of the patent ambiguous, leaving examiners and the public to guess about which claim language the drafter deems necessary to his claimed invention and which language is merely superfluous, nonlimiting elaboration." *Bicon, Inc. v. Straumann Co.*, 441 F.3d 945, 950-51 (Fed. Cir. 2006). Claims 1, 10, and 16 require a "single memory" and that requirement should not be read out of the claims so that they cover "multiple memory" devices by substitution of the ill-defined and amorphous "memory functioning as a unit" phrase.

D. The Flash Memory performs a function distinct from the DRAMs and does not function as a unit with the multiple DRAMs.

In addition to containing multiple DRAMs, there is no dispute that the accused Funai products also contain a flash memory. Indeed, Complainants' expert Dr. Acton conceded at the evidentiary hearing that all of the products which he analyzed [redacted]

[redacted]

(Hg. Tr. (Acton) at 534:20-25.)

[redacted], it does not "function as a unit" with the DRAMs. (RX-2814C.0054-55.). In fact, [redacted]. (JX-0018C at 38:6-39:6.) [redacted]

[redacted]. (*Id.*) [redacted] (RX-2814C.0054-55.)

In particular, the evidence showed that in the Funai [redacted], [redacted] Yu-Hau Chen, the MediaTek engineer who testified on the [redacted] products was asked, [redacted] (JX-0018C at 38:6-7.) Mr. Chen testified in response, [redacted] (*Id.* at 38:19-23.) Mr. Chen further explained that [redacted] (*Id.* at 38:24-39:6.) Because the flash memory is the only place [redacted]. Thus, [redacted] and, therefore, this is further evidence that the accused products use multiple memories and not a "single memory."

Moreover, because the flash memory [redacted], it does not "function as a unit" with the DRAMs. (RX-2814C.0054-55.) In fact, because the flash memory does not function as a unit with the DRAMs, the Complainants did not even present evidence about the flash memory. (RX-2814C.0032-34.) Instead for <u>all</u> of the Funai downstream products, Complainants simply ignored the flash memory. Accordingly, the only evidence regarding the flash memory is that it [redacted], and, therefore, it does not function as a unit with the DRAMs.

In sum, other than unsupported expert testimony, Complainants presented no evidence that the flash memory in any of the accused downstream products functions as a unit with the DRAMs. In contrast, Respondents submitted the testimony of fact witnesses including the chip designers to

show that the flash memory provides functions distinct from the DRAMs and do not function as a unit with the DRAMs.

III. Questions 2, 3 and 7[a] – The `087 Patent

2. What record evidence supports or does not support finding direct infringement by a third party user of each of the Funai products accused of infringing claims 10 and 11 of the '087 patent?

3. Please discuss and cite the record evidence, if any, that shows Funai actively and knowingly aided and abetted another's direct infringement of claims 10 and 11 of the '087 patent.

7[a]. Please discuss and cite the record evidence, if any, of Funai's pre-suit knowledge of the '087 patent … and Funai's pre-suit knowledge that the induced acts constitute infringement of the '087 patent … .

A. The Record Evidence Does Not Support a Finding of Indirect Infringement of the '087 Patent

The ALJ found that under LSI's constructions Funai induced infringement of claims 10-11 of the '087 patent and claims 1-9 of the '663 patent. ID at 98-100, 156-159. Questions 2 and 3 are directed to the sufficiency of the evidence to support an indirect infringement finding for the '087 patent. In particular, Questions 2 and 3 request discussion of any record evidence that "support finding direct infringement by a third party user of each of the Funai products accused of infringing claims 10 and 11 of the '087 patent" and that "Funai actively and knowingly aided and abetted another's direct infringement" of those claims. Review Order at 3. Finally, as it pertains to the `087 patent, Question 7 requests discussion of any evidence "of Funai's pre-suit knowledge of the '087 patent … and Funai's pre-suit knowledge that the induced acts constitute infringement of the '087 patent … ." *Id.* As explained below, the evidence does not support the ALJ's conclusion on indirect infringement. On review, therefore, the Commission should find that LSI has failed to provide evidence sufficient to prove indirect infringement under either party's construction.[9]

[9] Commission Question 1 which requests discussion of the ALJ's construction of certain terms in the '087 patent and their application to the accused products of is discussed *supra*, and for

B. Statement of Law

In order to demonstrate induced infringement, the patentee must demonstrate either that the accused infringer knew that the induced acts constituted patent infringement, or was willfully blind to that fact. *Global Tech Appliances, Inc. v. SEB S.A.*, 131 S. Ct. 2060, 2068 (2011). To prove willful blindness, the patentee must show that the defendant subjectively believed there was a high probability that a fact existed and that it took deliberate action to avoid learning that fact. *Id.* at 2070. Case law is also clear that "[t]he complaint is not sufficient to establish knowledge and intent." *See Certain Gaming and Entertainment Consoles, Related Software, and Components Thereof*, ITC Inv. No. 337-TA-752, Final Init. Remand Det. at 20 (Mar. 22, 2013) (non-reviewed by Comm'n May 23, 2013). Proof of direct infringement by a third party is a necessary predicate for both contributory and induced infringement. *Aro Mfg. Co. v. Convertible Top Replacement Co.*, 365 U.S. 336, 341-42 (1961); *Microsoft Corp. v. AT&T Corp.*, 550 U.S. 437, 443 (2007).

To establish inducement, Complainants must present evidence of a specific intent to utlilize, *i.e.*, proof that the alleged inducer acted with knowledge that the acts complained of would constitute patent infringement. "Unlike direct infringement, induced infringement is not a strict [**17] liability tort; it requires that the accused inducer act with knowledge that the induced acts constitute patent infringement" *Akamai Techs., Inc. v. Limelight Networks, Inc.*, 692 F.3d 1301, 1308 (Fed. Cir. 2012) (*en banc*). "Because liability for inducement, unlike liability for direct infringement, requires specific intent to cause infringement, using inducement to reach joint infringement does not present the risk of extending liability to persons who may be unaware of the existence of a patent or even unaware that others are practicing some of the steps claimed in the patent." *Id.* at 1308 n.1.

C. There is No Evidence in the Record That Funai Was Aware Any of Its Acts Infringed the '087 Patent Prior to LSI Filing Suit

.

---

the reasons stated therein the Commission should find that no claim of the '087 patent patent is infringed.

As stated above, Commission precedent is clear that in order for LSI to make out a case for indirect infringement of the '087 patent, it must show that Funai had knowledge of the patent ***prior*** to filing suit, ***and*** that it knew, or was willfully blind that, claims 10-11 of the '087 patent being infringed. *Certain Gaming and Entertainment Consoles, Related Software, and Components Thereof*, Inv. No. 337-TA-752, Final Init. Remand Det. at 20 (Mar. 22, 2013) (non-reviewed by Comm'n May 23, 2013); *Global Tech*, 131 S. Ct. at 2065. Unfortunately for LSI, there is no evidence in the record that Funai was even aware of the '087 patent, let alone believed the '087 patent was infringed, prior to LSI filing the complaint that led to this investigation.

The only evidence in the record that the '087 patent was mentioned ***at all*** during the [redacted] negotiation between Funai and LSI [redacted] LSI also never [redacted]. *See, e.g.*, CX-341C, CX-345C, CX-348C, CX-349C, CX-1146C-1148C, CX-1151C. Neither LSI's direct witness statements nor its oral testimony at the hearing argued that LSI made Funai aware it believed the '087 patent was infringed. *See* CX-1599C at Q/A 90-127 (discussing LSI's licensing discussions with Funai). Finally, Complainants' post-hearing briefs offer no evidence that Funai had any knowledge that the '087 patent was infringed prior to the filing of the complaint in March 2012. *See* Comp.'s Init. PHB at 128 (*citing* CX-1594C at Q/A 117).

Tellingly, LSI did not even attempt to argue that Funai had actual knowledge of the '087 patent, or that it knew the '087 patent was infringed. Instead, LSI attempted to impute knowledge of the '087 patent (and presumably, an infringement analysis of the '087 patent) based on Funai's awareness of LSI's patent portfolio. Comp.'s Init. PHB at 128. This simply does not withstand scrutiny. LSI, by its own testimony, has a portfolio of more than 13,000 patents. *See* CX-1599C at

Q/A 13-14. Over the course of LSI's [redacted] of negotiations with Funai, LSI presented infringement claims to [redacted], [redacted] *See* CX-0341C.0007, 0009. If LSI believed that the '087 patent was infringed by Funai, it had ample opportunity to make that belief plain. Yet LSI never even once asserted the '087 patent against Funai. To claim, as LSI must, that Funai was willfully blind because it did not (a) scour LSI's 13,000 plus patent portfolio in search of other patents that could potentially read on Funai's products; (b) actually find the '087 patent; and (c) read claims 10-11 and determine that LSI might, at some point in the future, decide to accuse Funai of infringing the '087 patent, simply defies belief.

The record evidence is insufficient to demonstrate that Funai believed there was a high probability that the '087 patent was infringed, and therefore Funai cannot be found to have induced infringement.

1. Funai Does Not Actively and Knowingly Aid Users to Practice Claims 10-11 of the '087 Patent

As explained above, Funai was not aware prior to the filing of the complaint in this investigation of claims 10-11 of the '087 patent. *See* RX-0933C; RX-1121C; RX-1162C. As such, Funai could not actively and knowingly aid users of its products to practice these claims. Further, even if Funai had known about claims 10-11 of the '087 patent, the record is clear that Funai's knowledge of how the MPEG decoders at issue actually function is extremely limited, and insufficient to support proof that Funai actively and knowingly aided in the practice of either claim.

The record shows that Funai imports two distinct sets of products that LSI accuses of infringing the '087 patent. The first set of products [redacted].[10] For these products, Funai offered LSI two Fed. R. Civ. P. 30(b)(6) witnesses on the structure, function, and operation of the decoders in its accused products – Mr.

[10] These products are model numbers [redacted].

Kazuaki Onishi for Funai's digital media (*i.e.*, DVD and Blu-Ray disc player) products, and Mr. Masaki Mori for Funai's digital television products. Both men testified that 1) [redacted], and 2) [redacted] JX-0042C at 40:1-41:10, 78:10-14; JX-0039C at 14:3-13, 96:11-99:8. Both claims 10 and 11 of the '087 patent require that "said demultiplexing one or more multimedia data streams, said performing MPEG decoding, and said controlling operations each use said unified memory." JX-0001 at 18:31-34. According to LSI's expert Dr. Acton, Funai's products meet this limitation by [redacted] CX-1594C at Q/A 338. Thus, in order to actively and knowingly aid users in infringing either claim, Funai would need to know that [redacted], which Funai does not. Therefore, LSI cannot prove induced infringement for these products.

The second set of products are DVD and Blu-ray disc players manufactured by a third party, [redacted].[11] JX-0037C at 16:7-17:11, 22:19-23:9. For these products, Funai [redacted] *Id.* at 77:16-79:4. Therefore, Funai cannot induce infringement of these products either. Dr. Acton attempts to argue that simply because the accused products decode of MPEG encoded data streams demonstrates inducement. *See, e.g.,* CX-1594C at Q/A 406. This would be true, however, if <u>and</u> only if the asserted claims were the only way of decoding MPEG video. LSI has not, however, asserted that the '087 patent is essential to the practice of any MPEG standard, and the record demonstrates that there are several non-infringing ways of actually decoding MPEG video. See RX-

[11] These products are model numbers [redacted]

2814C at Q/A 154.[12] As such, the mere fact that MPEG decoding takes place is insufficient to prove Funai actively and knowingly aids users to practice claims 10-11 of the '087 patent.

2. The Record Does Not Support A Finding of Direct Infringement of the '087 Patent by Funai's Third Party Users

For the reasons explained above with respect to the direct infringement allegations for the '087 patent, the record evidence does not support a finding of direct infringement of the '087 patent by Funai's third party users. Furthermore, LSI has failed to identify any particular third party users that have utilized the accused Funai products in an infringing manner.

IV. Question 4

> **Please discuss and cite the record evidence, if any, of how a person of ordinary skill in the art would interpret steps (A), (B), and (C) of claim 1 and elements (i), (ii) and (iii) of claim 11 of the '663 patent. Please also discuss how such record evidence shows or does not show that each step and element are or are not met literally and/or under the doctrine of equivalents by each of the accused Funai products containing MediaTek decoders.**

A. The Proper Interpretation of Claims 1 and 11 of the '663 Patent

The ALJ found that not a single limitation of claims 1 and 11, as properly construed, was infringed by the accused Funai products. (ID at 135-55). The ALJ based his finding on several sources of record evidence, including the specification and claims of the '663 patent itself (JX-0007), the file history of the '663 patent (JX-0008), the Witness Statements of Complainants' experts, Dr. Reinman (CX-1597C) and Dr. Richardson (CX-1644C), the Witness Statements of Respondents' expert, Dr. Schonfeld (RX-0007C and RX-2814C), the evidentiary hearing transcript in this Investigation, and various demonstrative exhibits presented at the evidentiary hearing.

[12] Indeed, the prior art asserted is replete with examples of MPEG decoders that LSI strenuously argues does not meet the claims. *See* RX-0007C at Q/A 30, Q/A 70, Q/A 129, Q/A 178, and Q/A 227; *see also* CX-1640C.

1. Overview of the '663 Patent

The '663 patent "is directed to an improved method for binarization of data" in a video stream. JX-0007 at JX-0007.0002. "Binarization" in its broadest form is simply using an algorithm to convert a decimal value into a sequence of binary digits, or bits (i.e., 1's and 0's), called a codeword. JX-0007 at col. 1:63-65; Hg. Tr. (Reinman) at 614:14-19. In the context of the '663 patent, this conversion of a decimal value into a binary codeword is called encoding. The *decoding* process typically involves applying the reverse algorithm on the binary codeword to obtain the original decimal value that was encoded. *Id.* Although the asserted claims of the '663 patent are directed to the decoding process, the '663 patent specification describes only encoding, and does not include a detailed description or any express algorithm for the decoding process. *See* RX-0007C (Schonfeld WS) at QA 365 at RX-0007C.0554.

2. The Level of Ordinary Skill and the ALJ's Claim Constructions

The ALJ found that a person of ordinary skill in the art relating to the '663 patent would have a degree in electrical engineering, computer engineering, computer science, or the equivalent, and at least 2-3 years experience in developing or implementing data processing software or hardware such as video decoders. (ID at 121). The ALJ also found that this experience would necessarily include some specific experience with video decoders.[13] *Id.* Against this backdrop, the ALJ construed seven claim terms or phrases from the asserted claims of the '663 patent.[14] (ID at 121-134).

3. Asserted Claims 1 and 11 of the '663 Patent

Claim 1 of the '663 patent recites three steps for generating an index value from a codeword. Claim 11 is a system claim that recites the same three steps. These three steps examine three

---

[13] Although the ALJ declined to adopt Respondents' proposed definition for the level of ordinary skill in the art, as noted by the ALJ, the parties have not identified any way in which the differences in the two proposed definitions affects any issue in this Investigation. (ID at 121 n. 27).

[14] Although Respondents' disagree with the ALJ's constructions, for purposes of this briefing, Respondents will discuss only how a person of ordinary skill would interpret claims 1 and 11 in view of the ALJ's constructions.

separate portions of a codeword—a "first portion," a "second portion," and a "third portion." The "second portion of said codeword" is expressly required to "follow[]" the first portion, and the "third portion of said codeword" is required to "follow[]" the second portion. JX-0007 ('663 patent) at cls. 1, 11. Therefore, the codewords referred to in the asserted claims must contain all three portions in the sequence below.

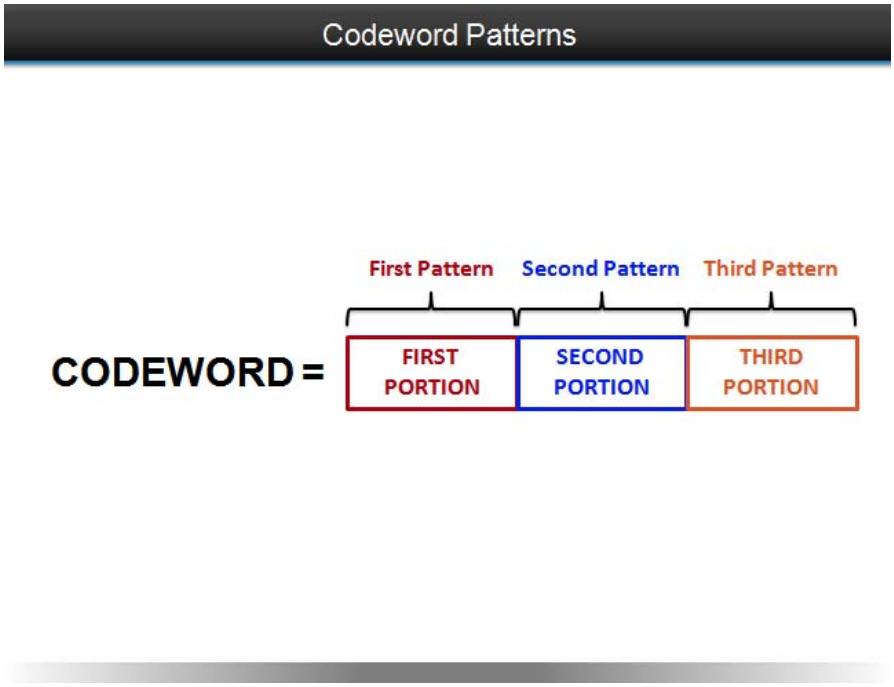

(a) Step (A) of Claim 1 and Element (i) of Claim 11

The first step of claim 1 recites "setting said index value to a threshold in response to a first portion of said codeword having a first pattern." Claim 11 recites the parallel system limitation of a circuit configured to "set an index value to a threshold in response to a first portion of said codeword having a first pattern."[15]

The language of the claims, on their face, requires the entire first portion of the codeword to be received (in order to determine if the first portion matches the required "first pattern") *before*

[15] The ALJ construed "setting said index value to a threshold"/"set an index value to a threshold" to mean "setting the index value to an initial number representing the point at which unary to exp-Golomb switching occurs." (ID at 123).

setting the index value to the threshold. Complainants' expert, Dr. Reinman, confirmed this interpretation of the claim language during cross-examination at the evidentiary hearing. Dr. Reinman agreed that having the complete first portion of the codeword was a "predicate" to performing each of the steps (A), (B), and (C):

> 10 Now, you would agree with me that the
> 11 language of claim 1 requires each of these
> 12 steps A, B, and C to be performed in response
> 13 to a first portion being received. True?
> 14 ***A. Not just being received, but the first***
> 15 ***portion having a first pattern***.
> 16 Q. Thank you. So at a minimum, what is
> 17 common about the claim steps A, B, and C is
> 18 that you have to have at least the first
> 19 portion of the code word. That's a predicate,
> 20 right?
> 21 ***A. With having the first pattern, and***
> 22 ***that would be a predicate, yes, sure.***

Hg. Tr. (Reinman) at 631:10-22.

This requirement of setting the index value in response to the entire first portion is also confirmed by the '663 patent specification. While the specification describes only the *encoding* process and not the *decoding* process (*see* RX-0007C (Schonfeld Witness Statement) at QA 365 (RX-0007C.0554)), and the specification states that a decoder may "reverse[] the steps applied by [the] encoder" or "reverse[] the binarization" process described in the patent. (JX-0007.0010 ('663 patent) at col. 3:6-10; 4:17-20). Therefore, a person of ordinary skill in the art would presumably understand the patent to disclose a method of decoding that aligns with the steps of the encoding process taught in the patent.

As shown below in Complainants' own demonstrative, the encoding process described by the specification involves forming an initial prefix (or "first pattern") only after conducting a "test" to see if the index value "v" to be encoded is greater than or equal to the threshold "N".

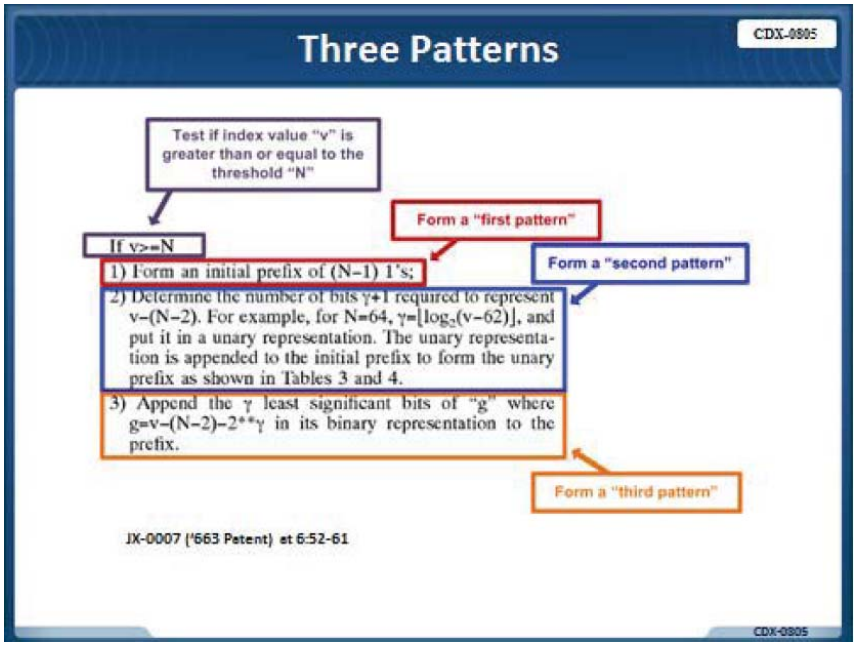

(CX-1597C (Reinman Witness Statement) at CX-1597C.0025).

Only if the index value is *greater than or equal to* the threshold are encoding steps 1), 2), and 3) shown above (which generate the first, second, and third patterns of the asserted claims) ever performed. The result of these three encoding steps is the construction of a "hybrid" code that combines a unary code with an exp-Golomb code. (JX-0007.0011 ('663 patent) at col. 6:19-28). Conversely, if the index value is *less than* the threshold, an alternative unary-only coding is used for the complete codeword as explained below.[16]

[16] This process is set forth in dependent claim 2, which recites the additional step of "generating said index value based on a fourth pattern in said first portion in response to said fourth pattern being other than said first pattern."

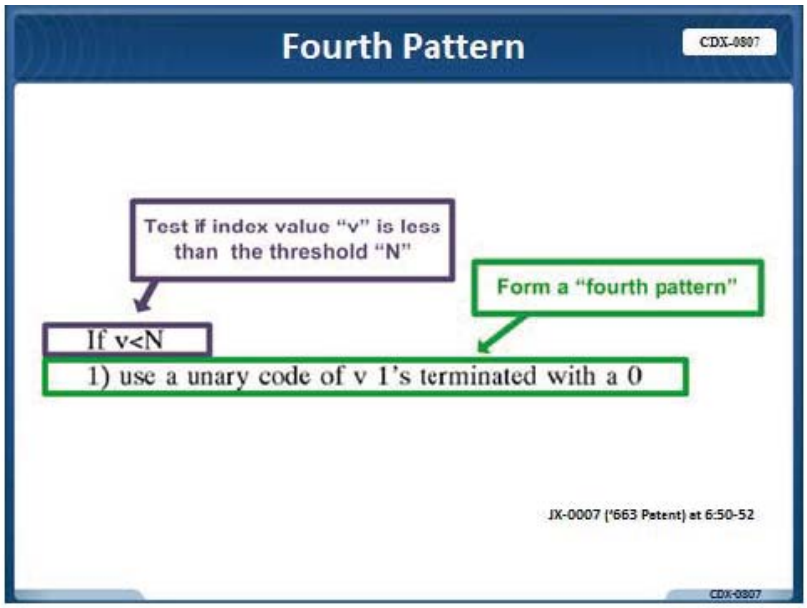

(CX-1597C (Reinman Witness Statement) at CX-1597C.0027).

Thus, for the encoding process, an initial test comparing the index value to the threshold is required before *any* encoding takes place, as the result of this test determines the coding format of the resultant codeword (*i.e.*, a hybrid unary plus exp-Golomb code or a unary-only codeword). In order to *decode* the encoded codeword, therefore, there is a "predicate" that the entire first pattern must be completely received so that the decoder can compare this first pattern to the threshold in order to determine the appropriate format of the codeword. (Hg. Tr. (Reinman) at 631:10-22). Accordingly, the first pattern must be present for the decoding steps of claim 1 to be performed.

Complainants allege the claims "envision parsing each codeword (and its constituent bits) 'as it comes in.'" (Comp. PostHB at 284). This argument is unsupported by the record evidence. First, Complainants argument directly contradicts the express language of claim 1, which recites performing step (A) "in response to a first portion of said codeword having a first pattern." Moreover, neither the '663 patent specification nor the '663 patent prosecution history say anything about parsing the codeword bit-by-bit. In fact, parsing a codeword "as it comes in" directly contradicts Dr. Reinman's testimony at the evidentiary hearing where he confirmed that receiving the

first pattern is a "predicate" or prerequisite to performing steps (A), (B), and (C) of claim 1. (Hg. Tr. (Reinman) at 631:10-22).

The language of dependent claim 2 also supports Respondents' reading of the claims. In claim 1, a "first pattern" is detected in the first portion of the codeword (indicating a hybrid unary plus exp-Golomb codeword), while in claim 2 a "fourth pattern" is detected in the first portion of the codeword (indicating a unary-only codeword). At the evidentiary hearing, Complainants' expert Dr. Reinman *admitted* that detecting a first pattern, as required by claim 1, and detecting a fourth pattern, as required by claim 2, are "mutually exclusive scenarios." (Hg. Tr. (Reinman) at 718:17-23). Thus, the *entire* first pattern (all 15 bits as shown below in red) must be received before a decoder can determine whether the received first portion contains a first pattern or a fourth pattern.

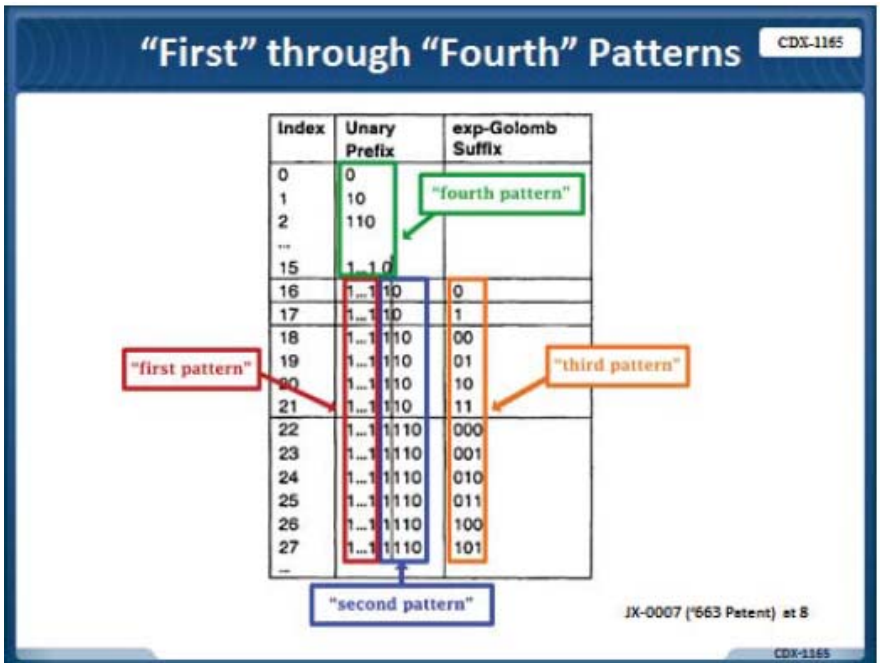

(CX-1644C (Richardson Witness Statement) at CX-1644C.0034).

For example, if 15 1's are received and the next bit is a '1', then the first pattern (in red) was received. If 15 1's are received and the next bit is a '0', then the fourth pattern (in green corresponding to the index value 15 in the example above) was received. It is self-evident, therefore,

that the decoder must wait until at least 16 bits are received to determine if the first portion of the codeword contains the first pattern or the fourth pattern.

(b) Step (B) of Claim 1 and Element (ii) of Claim 11

The second step of claim 1 recites "adding an offset to said index value based on a second pattern in a second portion of said codeword following said first portion in response to said first portion having said first pattern." Claim 11 recites the parallel system limitation of a circuit configured to "add an offset to said index value based on a second pattern in a second portion of said codeword following said first portion in response to said first portion having said first pattern." As described above in connection with step (A), this step is also performed "in response to" said first portion having said first pattern. It is axiomatic, therefore, that this step cannot be performed until the entire first pattern has been received. Otherwise, the decoder would never know if "said first portion [has] said first pattern," as plainly required by the claim.

Moreover, this step expressly requires an "offset…based on a second pattern in a second portion of said codeword following said first portion…." Thus, one of ordinary skill in the art would understand that calculating the offset is based on having the complete first pattern as well as the second pattern, and this step cannot be performed until the entire first and second patterns have been received.

(c) Step (C) of Claim 1 and Element (iii) of Claim 11

The third step of claim 1 recites "adding a value to said index value based on a third pattern in a third portion of said codeword following said second portion in response to said first portion having said first pattern." Claim 11 recites the parallel system limitation of a circuit configured to "add an value to said index value based on a third pattern in a third portion of said codeword following said second portion in response to said first portion having said first pattern." As described above in connection with steps (A) and (B), this step is also performed "in response to said first portion having said first pattern." A plain reading of the claims, therefore, also requires this step to

be performed after the entire first pattern has been received. Otherwise, the decoder would not know if "said first portion [has] said first pattern," as plainly required by the claim.

Similarly, this step expressly requires a "value…based on a third pattern in a third portion of said codeword following said second portion." Thus, one of ordinary skill in the art would understand that this step cannot be performed until all three patterns have been received.

(d) The Steps Must Be Performed Sequentially

Complainants allege one of ordinary skill in the art would understand that at least steps (B) and (C) (and corresponding elements (ii) and (ii) of claim 11) could somehow be performed *simultaneously* instead of sequentially. Complainants are wrong—performing those steps simultaneously, to the extent even possible, conflicts with the entirety of the intrinsic evidence. The plain language of claims 1 and 11 recites those steps sequentially. Moreover, the '663 patent specification provides a specific numbered algorithm for the encoding process that a person of skill in the art would presumably understand to align with the decoding process. For instance, the '663 patent describes generating the three patterns of the codeword *sequentially* according to the enumerated steps shown below.

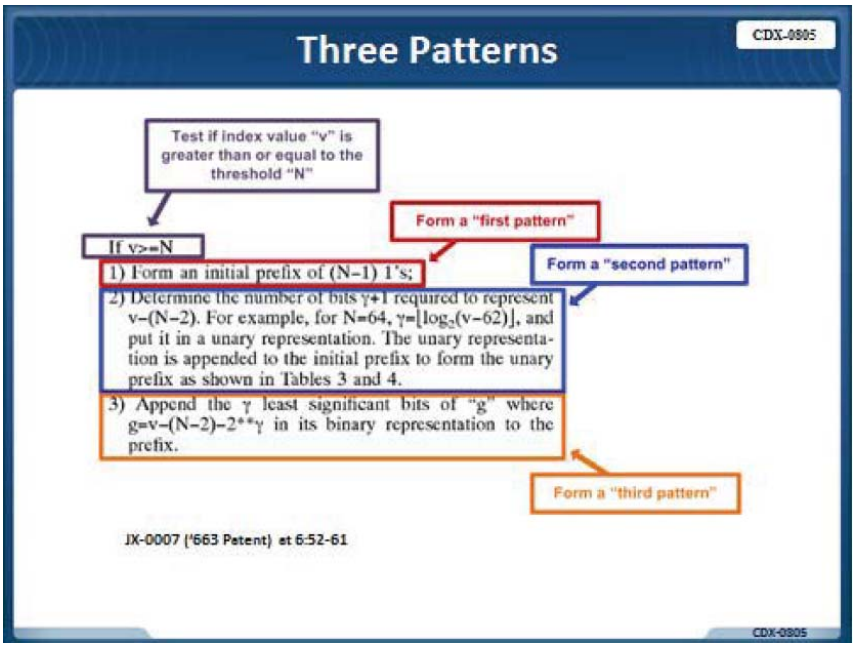

(CX-1597C (Reinman Witness Statement) at CX-1597C.0025).

As discussed above, one of ordinary skill in the art would presumably understand that one must undo the encoding process to arrive at the corresponding decoding process. (CX-0007C (Schonfeld Witness Statement) at CX-0007C.0568 [redacted] By reversing the encoding process, each of three steps shown above must still be performed sequentially but each step reversed. There is absolutely no support in the specification of the '663 patent to suggest any other interpretation was intended.

The prosecution history also confirms that the three patterns must be generated and processed in *sequential* order. In response to the Examiner's rejection of the claims as being anticipated by the Peng reference, the patent applicant made claim amendments to each of the independent claims in an attempt to distinguish the claimed invention over Peng. In Peng, the codeword space is divided into m ***overlapping*** groups based on the number of pulse combinations. (RX-0471 (Peng) at col. 11:11-12:30, 13:15-54, Figures 5 and 7). The codeword space is then grouped according to four classification stages, as shown below, with overlapping pulse positions. (*Id*). The Examiner equated the applicant's claimed codewords with the pulse combinations described in Peng.

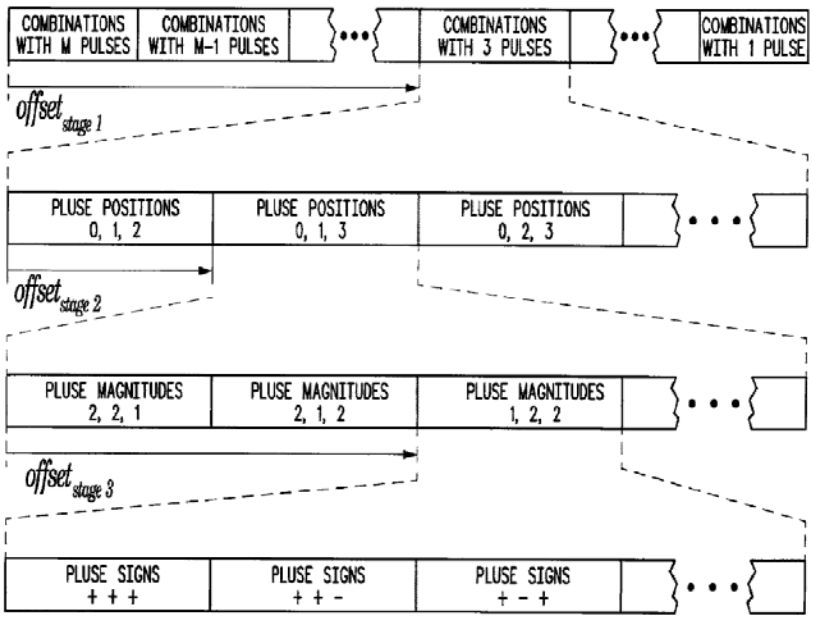

FIG. 7

(RX-0471 (Peng) at Figure 7).

In response to Peng's disclosure of an overlapping codespace, the '663 patent applicant amended all the independent claims to generally recite that the second portion of the codeword "follow[ed] said first portion" and the third portion of the codeword "follow[ed] said second portion," as illustrated below.

> 1. (CURRENTLY AMENDED) A method for generating an index value from a codeword for digital video decoding, comprising the steps of:
>
> (A) setting said index value to a threshold in response to a first portion of said codeword having a first pattern;
>
> (B) adding an offset to said index value based on a second pattern in a second portion of said codeword following said first portion in response to said first portion having said first pattern; and
>
> (C) adding a value to said index value based on a third pattern in a third portion of said codeword following said second portion in response to said first portion having said first pattern.

(JX-0008 at JX-0008.0088).

The result (which was consistent with a natural reading of the claim language before the amendment) was an express requirement that the three portions of the codeword—the first portion, the second portion, and the third portion—follow each other in order in the codeword. In this way, the claimed codewords were differentiated from Peng's codewords, which included overlapping portions. In other words, the claims were amended to require the first portion of the codeword to precede the second portion of the codeword, and the second portion of the codeword to precede the third portion.

The applicant then argued that the "pulse combination" in the Peng reference (what the Examiner equated to the claimed "codeword") did not have "a second portion following a first portion" or "a third portion following a second portion." (JX-0008.0097). In doing so, the applicant expressly distinguished the claimed invention from the Peng reference based on the explicit ordering of the three portions of the codeword and the requirement that the portions not be overlapping, as shown above.

Consistent with the '663 patent applicant's expressly distinguishing the claimed invention over the Peng reference, one of ordinary skill in the art reviewing the intrinsic record (including the prosecution history) would conclude that that three patterns of the codeword must sequentially follow one another and not overlap. Because the three patterns are required to be sequentially positioned within the codeword, one of ordinary skill in the art would understand that the same three patterns must be processed sequentially, one after another and in the order specified in the claims and described in detailed algorithm given in column 6 of the specification.

Complainants' argument that steps (B) and (C) can be performed simultaneously conflicts with the plain language of the claims, the patent specification, and the prosecution history. Furthermore, performing these steps simultaneously contradicts Complainants' interpretation of the claim which requires knowledge of the addition of the "value" corresponding to the second pattern and the "index value" corresponding to the "threshold" as determined by step (B) *before* performing

step (C). Hg. Tr. (Reinman) at 631:10-22. In essence, as will be explained below, Complainants are trying to fit a square peg in a round hole by re-writing the claims to attempt to cover Funai's products. But this conflicts with how a person of ordinary skill in the art would have understood those claims in light of the intrinsic evidence.

B. None of the Accused Downstream Products Infringe Claims 1 or 11 Literally or Under the Doctrine of Equivalents

The ALJ articulated a sound basis for his finding of non-infringement with respect to the '663 patent. (ID at 135-155). His finding was based on all the record evidence mentioned above in connection with the proper interpretation of claims 1 and 11, as well as MediaTek Source Code (CX-0559C) detailing the precise decoding implementation used in the accused Funai products with MediaTek decoders. (*Id.*).

Notably, the ALJ correctly found that not a single claim of the '663 patent was infringed. (ID at 135-55). Specifically, the ALJ found that *not even a single limitation* of independent claims 1 and 11 was practiced by the accused Funai products with MediaTek decoders, either literally or under the doctrine of equivalents. (ID at 139-147, 154-55).

1. The Record Evidence Supports the ALJ's Finding That the Accused Funai Products Using MediaTek Decoders Did Not Meet a Single Limitation of the Independent Claims

The record evidence plainly supports the ALJ's finding that the accused Funai products containing MediaTek decoders do not infringe independent claims 1 and 11 of the '663 patent. (ID at 139-147, 154-55). *First*, the accused and undisputed functionality—[redacted]—is outside the scope of the plain meaning of step (A) (or element (i)) of claims 1 and 11, which require setting the index to a threshold "in response to" receiving a complete first pattern. *Second*, the accused products never add the claimed "offset" to the index value, either literally or under the doctrine of equivalents, as required by step (B) (or element (ii)) of claims 1 and 11. *Third*, the accused products never add the claimed "value" to the index value, either literally or

under the doctrine of equivalents, as required by step (C) (or element (iii)) of claims 1 and 11. These three findings are all supported by the great weight of the record evidence.

a. Incrementing the Index Value for Every Two Bits Received is Plainly Outside the Scope of Step (A)

Complainants allege that the ALJ erroneously added a new limitation to step (A) of claims 1 and 11 by determining "that 'a bit-by-bit analysis' is not 'within the scope of the '663 claims.'" (Comp. Pet. at 6-14). Complainants are wrong. The ALJ's reading of those claims is consistent with their plain meaning and well supported by the record evidence. As discussed above, it is also consistent with how one of ordinary skill in art would interpret those claims in view of the specification. *See Phillips*, 415 F.3d at 1313; *Innova/Pure Water, Inc. v. Safari Water Filtration Sys.*, 381 F.3d 1111, 1116 (Fed. Cir. 2004) ("A court construing a patent claim seeks to accord a claim the meaning it would have to a person of ordinary skill in the art at the time of the invention.").

As discussed above, step (A) of claim 1 and element (i) of claim 11 both require "setting said index value to a threshold in response to a first portion of said codeword having a first pattern." (JX-0007 at 7:33-34; 8:17-19). As Complainants correctly note in their Petition, "[t]his is not a complicated limitation. All step (A) requires is an *action* (*i.e.*, 'setting said index value to a threshold') in response to a *condition being satisfied* (*i.e.*, 'a first portion of said codeword having a first pattern')." (Compl. Pet. at 13 (emphasis in original)). Respondents agree and submit that performing some action "in response to a condition being satisfied" is exactly what is required by the plain meaning of step (A) of claim 1 and element (i) of claim 11. Complainants' argument, therefore, conclusively supports the ALJ's finding of non-infringement.

The accused products plainly do not perform the required action "in response to" the required condition being satisfied. As admitted by Complainants in their Petition, the required action in step (A)/element (i) is "setting said index value to a threshold." *Id.* As further admitted by Complainants, the required condition being satisfied is receiving "a first portion of said codeword having a first

pattern." *Id.* It is undisputed that the accused products [redacted].[17] [redacted]. (RX-2814C at Q&A 178). Therefore, it is undisputed that the accused products *never* set the index value to the threshold "in response to" receiving the entire first pattern, as required by a plain reading of step (A).

Complainants' own demonstrative is illustrative. In the case where the threshold N = 16, Complainants allege the claimed "first pattern" is a pattern of 15 1's, as shown below in red.

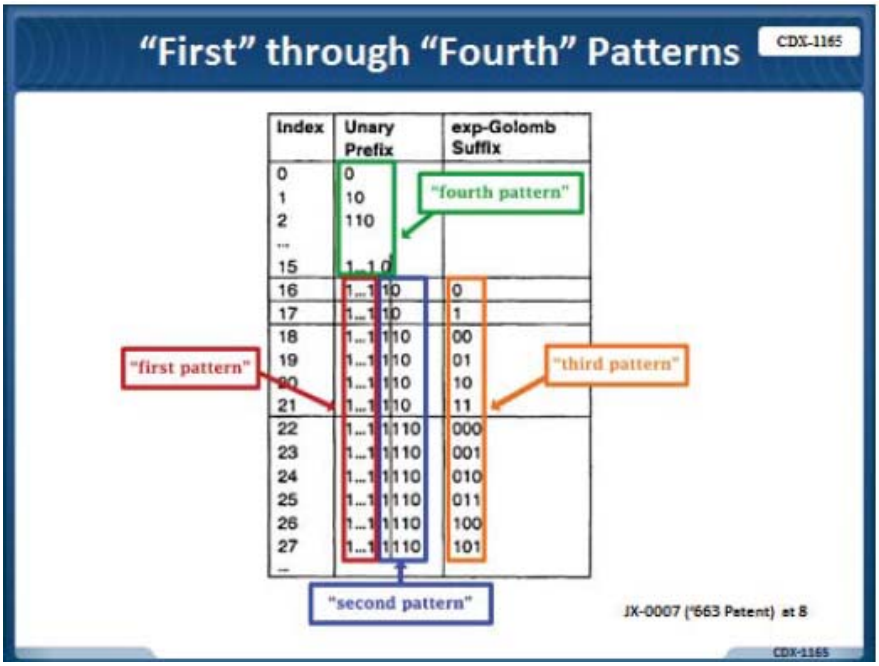

In order to infringe step (A) in this example, the index value must be set to the threshold (N = 16) in response to detecting the pattern of 15 1's. It is uncontested that this is not what occurs in the accused products. (Compl. Pet. at 7-10). In the accused products, [redacted]

[17] Complainants' expert, Dr, Reinman, admitted at the evidentiary hearing that [redacted] Hg. Tr. (Reinman) at 629:3-9; *see also* CX-1597C; CX-0501C at 2.

[redacted]. [redacted]. The accused products [redacted] Thus, the accused products plainly do not set the index value to a threshold "in response to" detecting the first pattern, as required by step (A).

Complainants never alleged that the MediaTek decoders in the accused Funai products perform this step under the doctrine of equivalents and have consequently waived any such argument. (Order No. 64, G.R. 7.)

b. Steps (B) and (C) Are Not Met Literally or Under the Doctrine of Equivalents

Complainants agree that the accused products do not perform steps (B) and (C) of claim 1 (or elements (ii) and (iii) of claim 11) *sequentially*, as a person of ordinary skill in the art at the time of the invention would have understood the claims. (Compl. Pet. at 16). Rather, Complainants allege that the accused products somehow perform these two steps *simultaneously*. (*Id.*) Setting aside Complainants' incorrect interpretation of the claims, the accused products do not simultaneously perform steps B and C because [redacted]

(i) There is No Literal Infringement

Even under Complainants' vast oversimplification of steps (B) and (C), the accused products do not infringe. Complainants allege that step (B) requires the claimed "offset" to be added to the index value, which has already been set to the "threshold," as shown below:

Step (B): "Threshold" + "Offset"

(Compl. Pet. at 16). Complainants also allege that step (C) then requires the claimed "value" to be added to the updated index value (*i.e.*, "threshold" + "offset"), as shown below:

Step (C): ("Threshold" + "Offset") + "Value"

(*Id.*).

The parties agree (and the ALJ found) that in the accused products the "offset" and "value" are summed prior to being added to the threshold "index value." (Compl. Pet. at 15-16). As an inescapable consequence, [redacted][18] What is added in the accused products are *completely different values* than what is required by the asserted claims. Because the accused products do not add the values recited by the claim, there can be no literal infringement. (*See Joy Techs., Inc. v. Flakt, Inc.*, 6 F.3d 770, 775 (Fed. Cir. 1993) ("A method claim is directly infringed only by one practicing the patented method"); *accord Akamai Techs., Inc. v. Limelight Networks, Inc.*, 692 F.3d 1301, 1307 (Fed. Cir. 2012) ("In the context of a method claim, that means the accused infringer must perform all the steps of the claimed method, either personally or through another acting under his direction or control")).

Moreover, contrary to Complainants' allegations, step (B) is not simply a matter of adding the offset to the index value. Rather, step (B) requires "adding an offset to said index value *based on a second pattern in a second portion of said codeword following said first portions in response to said first portions having said first pattern*." Similarly, step (C) is not simply a matter of adding the result of step (B) to the index value. Rather, step (C) requires "adding a value to said index value *based on a third pattern in a third portion of said codeword following said second portion in response to said first portion having said first pattern*." Thus, to mix-and-match the steps as Complainants propose ignores the multiple limitations in each step that go beyond mere addition.

[18] For the same reason, there can be no literal infringement of claim 11 either.

In fact, the accused products never perform steps (B) and (C) "in response to said first portion [of said codeword] having said first pattern." Complainants concede that in the accused products the alleged [redacted] (CX-1597C; CX-0501C at 2). Thus, the accused products do not perform steps "in response to a first portion of said codeword having a first pattern." (RX-2814C at Q. 177). Instead, as discussed above in connection with the first step of claims 1 and 11, the alleged step is in response only to the most recent two bits obtained from the bitstream.[19]

(ii) There is no infringement under the doctrine of equivalents

The accused products also do not infringe under the doctrine of equivalents. It is black letter law that "the doctrine of equivalents must be applied to individual elements of the claim, not to the invention as a whole." *Warner-Jenkinson Co., Inc. v. Hilton Davis Chemical Co.*, 520 U.S. 17, 29 (1997); *accord Deere & Co. v. Bush Hog, LLC*, 703 F.3d 1349, 1356 (Fed. Cir. 2012) ("the doctrine of equivalents must be applied to the claims 'on an element-by-element basis,' so that every claimed element of the invention—or its equivalent—is present in the accused product").[20] The accused products perform a method with a substantially different "function, way, and result" than what is recited in each of steps B and C. *Warner-Jenkinson*, 520 U.S. at 40.

(iii) The accused products perform a different function in a different way to achieve a different result than step (B) of claims 1 and 11

Step (B) of claim 1 generally requires the claimed "offset" to be added to the "index value." As explained above, in the accused products (the [redacted] is illustrative), [redacted]

[19] As previously noted, Complainants waived any doctrine of equivalents challenge concerning this first step of claims 1 and 11.

[20] Complainants failed to perform a doctrine of equivalents analysis on a limitation-by-limitation basis, as determined by the ALJ, and Complainants consequently waived the ability to make any such argument, particularly at this late stage in the investigation. (Order No. 64, G.R. 7.)

[redacted]. The function of step (B)—adding the "offset" to the "index value"—differs from the function performed by the accused products; each are distinct mathematical equations. *See Vehicular Technologies Corp. v. Titan Wheel Int'l, Inc.*, 212 F.3d 1377, 1382 (Fed. Cir. 2000) ("If this [omitted] function is 'key', an accused device which does not perform this central function could rarely, if ever, be considered to be insubstantially changed from the claimed invention.").

Moreover, the addition of the alleged "offset" with the alleged "value," and then the addition of that combined value to the alleged "index value" (*i.e.*, ("offset"+"value")+"index value") involves different mathematical operations from the claimed addition of "an offset to said index value" in step (B). Thus, the accused functionality is performed in a substantially different way. *See Dolly, Inc. v. Spalding & Evenflo Companies, Inc.*, 16 F.3d 394, 397 (Fed. Cir. 1994) ("To be an … 'equivalent', the element substituted in the accused device for the element set forth in the claim must not be such as would substantially change the way in which the function of the claimed invention is performed.").

Further, in the accused products, the addition of the alleged "offset" with the alleged "value," and then the addition of the combined value to the alleged "index value" (*i.e.*, ("offset"+"value")+"index value") achieves a substantially different *result* from the claimed addition of "an offset to said index value" in step (B). (RX-2814C at Q. 177.) The two sums formulated by the accused products—[redacted]—are each plainly different from the claimed sum of the "offset" plus the "index value." *See Crown Packaging Technology, Inc. v. Rexam Beverage Can Co.*, 559 F.3d 1308, 1312 (Fed. Cir. 2009) ("A finding of infringement under the doctrine of equivalents requires a showing that the difference between the claimed invention and the accused product was insubstantial… [o]ne way of doing so is by showing on a limitation by limitation basis that the accused product performs substantially the same function

in substantially the same way with substantially the same result as each claim limitation of the patented product.").

(iv) The accused products perform a different function in a different way than step (C) of claims 1 and 11

Step (C) of claim 1 generally requires the claimed "value" to be added to the "index value." In the accused products (the [redacted] is again illustrative), [redacted] The function of step (C)—adding the "value" to the "index value"—differs from the function performed by the accused products; each are distinct mathematical equations. *See Vehicular Technologies Corp.*, 212 F.3d at 1382.

Moreover, the addition of the alleged [redacted] again involves different mathematical operations from the claimed addition of "a value to said index value" in step (C). The accused functionality is performed in a substantially different way. *See Dolly, Inc.*, 16 F.3d at 397.

V. Questions 5, 6 and 7[b] – The '663 Patent

5. Please discuss and cite the record evidence, if any, that shows a third party user of each of the Funai products accused of infringing the '663 patent performed each and every step of asserted claims 1-9 of the '663 patent.

6. Please discuss and cite the record evidence, if any, that shows Funai actively and knowingly aided and abetted another's direct infringement of claims 1-9 of the '663 patent.

7[b]. Please discuss and cite the record evidence, if any, of Funai's pre-suit knowledge of . . . the '663 patent and Funai's pre-suit knowledge that the induced acts constitute infringement of . . . the '663 patent.

A. There is No Evidence in the Record That Funai was Aware The Accused Acts Infringed The '663 Patent Prior to LSI Filing Sui

Questions 5 and 6 request discussion of any record evidence that shows "Funai actively and knowingly aided and abetted another's direct infringement" and that "a third party user of each of the Funai products accused of infringing the '663 patent performed each and every step of asserted claims 1-9 of the '663 patent." *Id.*

Finally, as it pertains to the '663 patent, Question 7 requests discussion of any evidence of Funai's pre-suit knowledge of the '663 patent and Funai's present knowledge that the induced acts constitute infringement of the … '663 patent." *Id.*

As explained below, the evidence does not support the ALJ's conclusion on indirect infringement. On review, therefore, the Commission should find that LSI has failed to provide evidence sufficient to prove indirect infringement under either party's construction.[21]

The record is clear that Funai could not have induced infringement of the '663 patent, because it had no belief that the '663 patent was infringed by its downstream. *See Commil USA, LLC v. Cisco Sys.*, 720 F.3d 1361, 1367-68 (Fed. Cir. 2013); *DSU Med. Corp. v. JMS Co.*, 471 F.3d 1293, 1307 (Fed. Cir. 2006), overruled on other grounds, *Global Tech Appliances, Inc.*, 131 S. Ct. at 2060. While Funai and LSI repeatedly discussed the '663 patent during their negotiations, Funai always believed and maintained, based on its discussions with its vendors, that it did not infringe the '663 patent. *See, e.g.*, CX-1147C.0004, 0005; CX-1515C; CX-1397C. "While evidence of intent is not required to prove infringement, it is required to prove induced infringement." *Ecolab, Inc. v. FMC Corp.*, 569 F.3d 1335, 1351 (Fed. Cir. 2009).

To establish inducement, Complainants must present evidence of a specific intent to utlilize, *i.e.*, proof that the alleged inducer acted with knowledge that the acts complained of would constitute patent infringement. "Unlike direct infringement, induced infringement is not a strict [**17]

[21] Commission Questions 4, which requests discussion of the ALJ's interpretation of the requirements of clause 1 and 11 of the '663 patent is discussed *supra* and for the reasons stated therein the Commission should find that no claim of the '663 patent is infringed.

liability tort; it requires that the accused inducer act with knowledge that the induced acts constitute patent infringement" *Akamai Techs., Inc. v. Limelight Networks, Inc.*, 692 F.3d 1301, 1308 (Fed. Cir. 2012) (*en banc*). "Because liability for inducement, unlike liability for direct infringement, requires specific intent to cause infringement, using inducement to reach joint infringement does not present the risk of extending liability to persons who may be unaware of the existence of a patent or even unaware that others are practicing some of the steps claimed in the patent." *Id.* at 1308 n.1.

LSI's sole evidence of "intent" is that "Funai markets the Accused Funai H.264 Products to consumers in the United States touting the H.264 playback functionality that "when employed necessarily performs infringing UEGk decoding processes," "creates and distributes product manuals for the Accused Funai H.264 Products that provide instructions regarding how to set-up and operate the products," "arranges for the provision of, technical support to ensure that end users are able to operate all features of the Accused Funai Products in the United States," and "provides warranty support for the Accused Funai H.264 Products." Comp.'s PHB at 279-281. LSI offers no evidence that Funai actually believed that the H.264 processes infringed the '663 patent. Such lack of proof is fatal to LSI's case.

1. Funai Does Not Actively and Knowingly Aid Users of its Products to Practice Claims 1-9 of the '663 Patent

Finally, just with the '087 patent discussed *infra*, Funai does not actively and knowingly aid users of its products to practice claims 1-9 of the '663 patent because Funai's knowledge of how the decoders at issue actually work does not extend to the level necessary to actively and knowingly aid a user to practice the steps of the claims. Again, for each of the products against which LSI asserts the '663 patent, [redacted]. JX-0042C at 40:1-42:10; JX-0039C at 14:3-13; JX-0037C at 16:7-11, 22:19-23:9. While Dr. Reinman alleges that Funai actively

aids users to practice claims 1-9 of the '663 patent because it knows its products practice the H.264 standard (CX-1597C at Q/A 290-292), the ALJ properly found that LSI had failed to prove infringement based on the H.264 standard under either party's construction. Final Init. Det. at 138 (Complainant's analysis of the H.264.2 Reference Software, however, is not dispositive of the question of whether Funai's products infringe the asserted '663 claims.... [U]se of the H.264.2 Reference Software is optional, and there is no evidence that any Funai product incorporates the reference software."). Therefore, LSI has failed to prove induced infringement for the '663 patent.

2. The Record Does Not Show Third Parties Practice Each Step of Claims 1-9 of the '663 Patent

In order to prove indirect infringement, LSI must show that some third party commits direct infringement. In this investigation, LSI alleges that the users of Funai's accused DTV and Blu-ray disc players directly infringe the '663 patent. However, the evidence offered by LSI is insufficient to prove direct infringement by the users of Funai's products. LSI's expert, Dr. Reinman, never performed a step-by-step analysis of the '663 patent to demonstrate infringement. Rather, Dr. Reinman's analysis makes two key assumptions: first, that the H.264 standard necessarily infringes the '663 patent, and that a user of an accused Funai product necessarily practices the H.264 standard. Both of these assumptions, however, are incorrect.

First, the ALJ properly found that Dr. Reinman (and therefore, the LSI) never compared the claims of the '663 patent to the H.264 standard itself. Instead, Dr. Reinman compared the '663 patent claims to a piece of reference code called the H.264.2 Reference Software. *See* CX-1597C at Q/A 174-178. Even if the H.264.2 Reference Software meets all of the elements of claims 1-9 of the '663 patent, testimony from LSI's own expert established that the H.264.2 Reference Software was used to "assist in the implementation of decoding syntax elements encoded during UEGk binarization," and was merely "a starting point" for code that implemented the H.264 standard. CX-1644 at Q/A 514, 518.

Second, Dr. Reinman and LSI offer nothing but his naked opinion that "it is a near certainty that many – if not the great majority – of end users will use the accused products to decode high definition H.264-encoded Blu-ray discs or stream HD H.264-compliant video content." CX-1597C at Q/A 288. However, the products at issue are capable of operating without ever decoding H.264 encoded data streams. Without H.264 decoding being an inevitable result, LSI cannot rely on a feature of a product to show infringement of a method claim – LSI must demonstrate that someone has actually practiced the claim, which it failed to do. *See ePlus, Inc. v. Lawson Software, Inc.*, 700 F.3d 509, 521-22 (Fed. Cir. 2012) (vacating a denial of JMOL of no infringement as to two method claims since the patentee had only presented evidence that the accused system had the capability to perform the claimed method by using UNSPSC codes, but had not presented any direct or circumstantial evidence that anyone had actually used those codes in the system; *see also ACCO Brands, Inc. v. ABA Locks Mfrs. Co., Ltd.*, 501 F.3d 1307, 1313 (Fed. Cir. 2007). Therefore, there can be no induced infringement of the '663 patent.

VI. Questions 8 and 9

8. What record evidence supports or does not support the conclusion that the '958 patent is entitled to the July 30, 1996 priority date of U.S. Patent No. 5,862,182?

9. Please discuss and cite the record evidence, if any, that shows the asserted claims of the '958 patent are invalid as being anticipated or rendered obvious by Prasad. Assuming the priority date of the '958 patent is April 22, 1998, please discuss and cite the record evidence, if any, that shows the combination of the Harris Proposal in view of the van Nee article, and the combination of the Proakis textbook in view of the Weathers patent render the asserted claims of the '958 patent obvious.

A. The Record Evidence Does Not Support the Conclusion that the '958 Patent is Entitled to the July 30, 1996 Priority Date of U.S. Patent No. 5,862,182.

The ID erroneously concludes that the priority date of the asserted claims of the '958 patent is July 30, 1996, the filing date of the '574 application, which resulted in U.S. Patent No. 5,862,182. ID at 207-211.

Consistent with Agere's stipulation in the *Sony* case, the priority date of the asserted claims of the '958 patent is no earlier than April 22, 1998, the filing date of the '188 application. JX-0003 ('958 patent) at 1. There are elements in each of the asserted claims that are not disclosed in the earlier-filed '310 application or '574 application, to which the '188 application claims priority.

Complainants bear the burden of proving that the asserted claims are entitled to a priority date earlier than April 22, 1998. Complainants' expert conceded that, unless the asserted claims are accorded an earlier date than April 22, 1998, Mr. van Nee's 1996 article, "OFDM Codes for Peak-to-Average Power Reduction and Error Correction" ("van Nee 1996," RX-0614), is prior art that would disclose or render obvious the asserted claims of the '958 patent. Hg. Tr. (Katti) at 1877:9-16. Thus, Complainants are "obligated to come forward with evidence to the contrary," i.e., "evidence to prove entitlement to claim priority to an earlier filing date." *PowerOasis, Inc. v. T-Mobile USA, Inc.*, 522 F.3d 1299, 1305-06 (Fed. Cir. 2008). Complainants, however, failed to present evidence that each asserted claim is entitled to the 1996 filing date of the '182 patent.

To prove that the asserted claims are entitled to the priority date of the '574 patent application, Complainants must demonstrate that "the earlier application . . . compl[ies] with the written description of 35 U.S.C. § 112, ¶ 1." *Tronzo v. Biomet*, 156 F.3d 1154, 1158 (Fed. Cir. 1998). Complainants have failed to meet their burden.

Each independent claim of the '958 patent requires "a code having N chips in response to the group of data bits, the code being a member of a code set that includes M codes, wherein M>N." The parties agree that this term means "the number of codes in the set from which a selected code is chosen (M) must always exceed the number of bits in each code of the set (N)." However, unlike the '958 patent, which explicitly teaches the use of an "extended code set," the '574 application does not mention or describe an "extended code set" with the property M>N, and does not adequately describe "a code having N chips in response to the group of data bits, the code being a member of a code set that includes M codes, wherein M>N." RX-0006C (Heegard Direct WS) at QA 291-94.

The ID concludes that the nonsquare Matrix A in the ’574 application discloses “M>N” to a person of ordinary skill in the art. ID at 209-210 (“There are eight rows and four columns used to encode phases.”). However, the ID and Complainants do not even attempt to show that Matrix A is a code set (which it is not), that it is comprised of codes (which it is not), or that the elements of Matrix A are chips (which they are not). Complainants point to nothing in the ’182 patent (or corresponding ’574 application) that describes either Matrix A as a “code set” or “a modulator that chooses a code” from Matrix A “in response to the group of data bits.” In fact, Matrix A is an “encoding matrix” that is applied to an input vector containing four phases “Φ_1 to Φ_4.” CX-0878 (‘182 Patent) at 4:34-59; *See* also Hg. Tr. (Katti) at 1865:18-24 (agreeing that Matrix A is “taking four phases as input” and producing a sequence of “eight complex chips”). Therefore, even if Matrix A could be viewed as a “code set” within the meaning of the ‘958 patent (which it cannot), the number of “codes” (M) in Matrix A would be 4 (one for each phase input), and each “code” would be 8 values in length. In other words, M=4 and N=8, and M<N, not the reverse. The ‘574 application contains no description of the claimed code set where “the number of codes in the set from which a selected code is chosen (M) must always exceed the number of bits in each code of the set (N).”

Complainants refer to a multiplication of four phases by Matrix A to produce eight phases, and a “group of twelve bits.” Compl. Resp. to Funai’s Pet. at 49. Notably, nowhere do Complainants identify what the number of codes “M” is in the code set. Even if each code is length twelve, N=12, this is greater than M=4 (four phases) or M=8 (eight phases), which does not satisy the claim requirement of M>N. Instead of addressing this, Complainants refer to “4096 possible codes.” Compl. Resp. to Funai’s Pet. at 50. But Complainants do not identify which of these 4096 possible codes are actually in a code set, such that the number of codes (M) is greater than N=12 according to Complainants. Complainants’ reference to a calculation of the number of “possible codes” by calculating 2^X, where X is the number of each bits in a code, is of no moment. For all values X>1,

the number of binary "possible codes" would always be greater than the length of each code. But this is not a description of the number of actual codes in a code set, where the number of the codes in the set is greater than the length of each code.[22] Nor did Complainants show how Matrix A in the '574 application comply with the additional claim limitations associated with the "code set" in the claims. JX-0003 ('958 patent) at 12:50-64.

Further, Complainants' expert, Dr. Katti, conceded at trial that the applications for the '574 patent application and '182 patent contained no specific disclosure of several other elements recited in the asserted claims, including:

- "at least one carrier signal is QPSK modulated in accordance with the selected code" (claim 25) (Hg. Tr. (Katti) at 1860:9-16);[23]
- "a scrambler for scrambling the group of data bits" (claims 26, 32, 35) (*id.* at 1860:21-1861:2);[24] and
- "a complementary code that provides autocorrelation sidelobes suitable for multipath environments" (claims 22, 32) (*id*. at 1863:2-12).

Complainants argue that the '182 patent discloses low autocorrelation sidelobes for an OFDM system. Compl. Resp. to Funai's Pet. at 50 (citing CX-1641C (Katti RWS) at Q&A 139-140.

---

[22] This is also illustrated by Complainants' effort to distinguish one embodiment in the Prasad prior art in which the number of actual codes in a code set M=4 is less than the length of each code N=16. Yet if Complainants' theory of the number of "possible codes" for Matrix A in the '182 patent were applied to the Prasad prior art, there would be 2^{16} number of possible codes, which is clearly greater than 4 or 16.

[23] The '182 patent does not disclose "phase-shift keying" generally; it only refers to "two variants," 8-PSK and BPSK, as Dr. Katti's conclusory testimony and Complainants' initial briefing confirms. CX1641C (Katti Direct WS) at QA 142; Comp. PostHB at 35.

[24] The fact that a data scrambler could be incorporated is not sufficient to show written description. CX1641C (Katti Direct WS) at QA 143-44.

But the asserted claims are not directed to an OFDM system. The sole named inventor of the '958 patent, Dr. van Nee, [redacted] RX-1788C at 58:21-59:23.[25] [redacted] RX-1816C [redacted] RX-1788C at 27:22-31:20, 34:9-19.[26]

Complainants also argue that a scrambler would be "pretty much" inherent in any kind of digital communication system. Compl. Resp. to Funai's Pet. at 50. Even assuming some weight could be given to such a nebulous statement, something that is "pretty much" inherent (or even common) does not rise to something is actually inherent (necessarily disclosed). Dr. Heegard confirmed there is no such disclosure. RX-0006C (Heegard Direct WS) at QA 309.

Finally, with respect to priority, Complainants only addressed five elements of these claims: "serial-to-parallel converter," "M>N," "autocorrelation sidelobes," "QPSK," and "scrambler." Comp. PostHB at 32-35; Comp. PostHRB at 95-97; CX-1641C (Katti Direct WS) at QA 128-44. Complainants fail to show that the '182 patent discloses all of the asserted claim elements.

B. The Record Evidence Shows that the Asserted Claims of the '958 Patent are Invalid as Being Anticipated or Rendered Obvious.

---

[25] The '182 patent describes using complementary codes for a different purpose, "low PAP [peak-to-average power] ratio," and does not mention "autocorrelation," "sidelobes," or "multipath." CX-0878 ('182 patent) at 1:34-38; RX-0006C (Heegard Direct WS) at QA 295.

[26] On April 22, 1998, Complainant Agere (then Lucent) filed the '958 patent application, which did not claim priority to the '574 application, nor did it mention or incorporate by reference the '574 application. Compare JX-0004 (File History of '958 Patent) at JX-0004.0008 with JX-0003 ('958 patent) at 1:4-10. Agere's attorneys amended the '958 patent application to claim priority to the '574 application and incorporate it by reference only years later, in January 2002, a litigation-inspired move.

1. The Record Evidence Establishes That Prasad Anticipates Asserted Claims 22, 23 and 24 of the ’958 Patent.

a. Overview

Contrary to the ALJ’s conclusion in the ID (ID at 212), the Prasad prior art anticipates claims 22, 23 and 24 of the ’958 patent. RX-0006 (Heegard Direct WS) at QA 318-58. But the ID correctly concludes that the Prasad is prior art to the asserted claims of the ‘958 patent pursuant to 35 U.S.C. § 102(b). ID at 211 (analyzing RX-0590; also RX-1352 (Ellett Declaration ¶ 16). Prasad discloses a digital modulation system that maps a “sequence of information digits” to an “orthogonal set of complementary sequences.” RX-0590 (Prasad – Data Transmission) at 837MEDIATEK000023288. Prasad specifically teaches a procedure for using complementary codes to generate complementary sequence sets, which are defined as “sets where the sum of the individual autocorrelation function for each constituent sequence in the set is zero for all time shifts.” *Id.* at 837MEDIATEK000023287. Prasad also describes a modulator that maps a sequence of k bits in length to one of $2M = 2^k$ complementary sequence sets, and then transmits the set in parallel over multiple frequency sub-carriers. *Id.* at 837MEDIATEK000023288-89. Each complementary sequence set is expressed as a matrix with variable dimensions – a set may have a “variable number of sequences” corresponding to the number of sub-channels, or the set may have “variable length” corresponding to the number of bits transmitted over each sub-channel. *Id.* For instance, for a code set where M=16, Prasad discloses that the length of each sequence and set “can vary in length from 2 bits to 32 bits.” *Id.* at 837MEDIATEK000023289, 837MEDIATEK000091 fig. 4(d); RX-0006C (Heegard WS) at QA 335. Therefore, Prasad discloses, among other code sets, a complex code set where M =16 and N = 2, satisfying the claimed property of M>N. Complainants’ reference to one embodiment in Prasad in which M=4 and N=16 is of no moment; it is only a single embodiment. Compl. Resp. to Funai’s Pet. at 54.

b. Complainants Concede that Prasad Discloses All Limitations of Claims 22-24 Except M>N.

The ID attempts to distinguish Prasad as a multi-carrier system rather than a single carrier system such as in the ’958 patent. ID at 212. But this distinction in no way relates to the asserted claims.

In fact, Complainants only dispute as to whether Prasad anticipates the claims of the ‘958 patent rests on a single claim limitation – “a code having N chips in response to the group of data bits, the code being a member of a code set that includes M codes, wherein M>N.” Hg. Tr. (Katti) at 1799:1-7. Complainants do not dispute that Prasad discloses all other elements of claims 22-24, including:

- a digital modulation system for modulating data bits (RX-0006C (Heegard WS) at QAs 337-338);
- a serial-to-parallel converter that groups the data bits (*id.* at QAs 339-340);
- a modulator that chooses a code (*id.* at QAs 341-344) ;
- a code set derived from a complementary code that provides autocorrelation sidelobes suitable for multipath environments (*id.* at QAs 345-349);
- a digital modulation system comprising a mixer that modulates a carrier signal in accordance with the chosen code (*id.* at QAs 351-353); and
- a mixer that modulates the phase of at least one carrier signal in accordance with the selected code (*id.* at QAs 354-357).

c. Respondents’ Application of M>N Simply Mirrors Complainants’ Own Infringement Arguments.

As discussed above, the code words described in Prasad are matrices of binary sequences transmitted over parallel sub-channels. In other words, the “codes” in Prasad are complex, not real.

However, according to Complainants' interpretation of the term "code" as used in the patent claims, which includes both real and complex values, "[c]odewords can be binary matrices, and the code can be a set of matrices." CX-1641C (Katti RWS) at QA 74. Accordingly, Complainants themselves do not dispute that each set of complementary sequences in Prasad is a "code" according to their proposed construction.

As Respondents' expert Dr. Heegard has testified, if the term "code" is construed to include complex codes or binary matrices, then an implementation of the Prasad system with 2 sub-channels can be viewed simply as transmitting a single sequence of complex "chips" across both channels, with each complex"chip" comprising a pair ofbits. RX-0006C (Heegard WS) at QA 344. Accordingly, the length *N* of each "code" chosen in Prasad is simply the number of complex chips, or the length of each binary sequence, in the matrix. *Id.* This is consistent with Prasad's own description of the "length" of each code. RX-0590 (Prasad – Data Transmission) at 837MEDIATEK000023289 (describing codes in terms of their "sequence length"). Moreover, Dr. Heegard's analysis matches Complainants' own "phase-chip" theory of infringement, which accuses Ralink products of selecting "codes" of 8 "phase chips" in length in response to a group of data bits, where each "phase chip" comprises two code bits. CX-1596C (Negus WS) at QAs 200, 213. Complainants attempt to dismiss this damning evidence, but only weakly. Compl. Resp. to Funai's Pet. at 54. Contrary to Complainants' make-weight argument, Funai is not double-counting the number of codes in Prasad because each code can be viewed simply as transmitting a single sequence of complex "chips" across multiple channels (or carriers). RX-0006C (Heegard WS) at QA 344.

d. Complainants Admit that Prasad Discloses M>N When Inversions Are Included in the Code Set.

Complainants argue that, "in Prasad the number of chips in a codeword is either equal to the number of codewords (M=N) or greater than the number of codewords (M<N)." CX-1641C (Katti

RWS) at QA 177. However, Complainants also note that "Prasad also teaches that 2M codewords can be generated by inverting the sequences in each codeword." *Id.* at QA 174.

At trial, Complainants' expert, Dr. Katti, testified that by including inversions in the code set, the M>N limitation (and therefore all asserted clam elements) would be disclosed in Prasad:

Q. So you agree that the term M greater than N, in the claims of the '958 patent, the only limitation you claim is not satisfied by Prasad[,] would actually be satisfied by including inversions. Yes?

A. If you are to include inversions, yes, Prasad would satisfy M greater than N. Hg. Tr. (Katti) at 1807:24-1808:5; *see also* CX-1641C (Katti Direct WS) at QA 174, 177. Dr. Katti further agreed that inversions of existing code words satisfied the literal definition of "codes" as "sequences of chips." *Id.* at 1808:10-15. Complainants attempt to explain away this testimony by their expert, arguing that the assumption of Dr. Katti's testimony was that for M=N, if inversions are also included, then M>N in Prasad. Compl. Resp. to Funai's Pet. at 54-55, n.13 (citing Hg. Tr. (Katti) at 1807:24-1808:15). There was no such assumption in Dr. Katti's testimony, as can be clearly seen in the record. In any event, Complainants previously conceded that Prasad discloses M=N and that Prasad "also teaches 2M codewords can be generated by inverting the sequences in each codeword." Comp. PHB at 403. So if inversions are included, M>N, as Dr. Katti conceded and as Complainants previously conceded. *Id.*; Hg. Tr. (Katti) at 1807:24-1808:15.

The only explanation that the ID and Complainants provide for excluding inversions from the scope of the claims is a cursory allegation that the use of inversions was "disclaimed during the prosecution of the '574 application." ID at 213; Compl. PrHB at 634. However, Complainants provide no analysis of the prosecution history of the '958 patent beyond a single statement in the November 13, 2000 amendment that in the preliminary claims, "said N > M [sic] relationship is independent of any inversions." CX-1641C (Katti RWS) at QAs 97-98. Following the statement cited by Dr. Katti, the Examiner once again rejected the applicant's claims; eventually, the claims of the '958 patent were allowed *not* on the basis of the "M>N" limitation, but because of the newly

added limitation that the code set was "derived from a complementary code that provides autocorrelation sidelobes suitable for multipath environments." JX-0004 (File History of '958 Patent) at JX-0004.0185-186; *see* Resp. PostHB at 40-47, 109. Complainants' failure to address the full prosecution history and the actual written description of the '958 patent shows the selected excerpt Complainants chose to quote clearly fails to rise to the level of a "clear and unmistakable" disavowal. *Omega Eng'g, Inc. v. Raytek Corp.*, 334 F.3d 1314, 1325-26 (Fed. Cir. 2003). Therefore, claims 22-24 are invalid as anticipated by Prasad based on any of the claim construction discussed in the ID. RX-0006C(Heegard WS) at QAs 318-358.

2. The Record Evidence Establishes that Prasad Renders the Asserted Claims of the '958 Patent Obvious.

a. Overview

Contrary to the ALJ's conclusion in the ID (ID at 213-214), Prasad renders claims 25, 26, 29, 32 and 35 of the '958 patent invalid as obvious. RX-0006C (Heegard WS) at QA 518-38.

As an initial matter, the ID essentially rejects Prasad as rendering obvious claims 25, 26, 29, 32 and 35 merely because Prasad allegedly does not disclose "M>N." ID at 213. As was discussed above, this finding is clearly erroneous. In fact, as demonstrated above, Prasad discloses all the limitations of, and therefore both anticipates and renders obvious, claims 22-24 of the '958 patent. The remaining asserted claims (25, 26, 29, 32 and 35) contain only three limitations not found in claims 22-24:

- "the phase of the at least one carrier signal is QPSK modulated in accordance with the selected code" (claim 25);
- "a scrambler for scrambling the group of data bits" (claims 26, 32, 35); and

- "the complementary code is defined by the sequence ABAB', such that A is a sequence of elements and B is a sequence of elements and B' is derived by inverting all elements in the sequence B" (claims 29, 35).

Complainants concede that each of the above limitations was well known in the prior art to the '958 patent. Moreover, Complainants have presented no relevant information to rebut Dr. Heegard's analysis that a person of skill in the art would have found it obvious to combine any of the above limitations with the system disclosed in Prasad, or any other digital modulation system. *See* RX-0006C (Heegard WS) at QAs 518-538.

b. Complainants Concede that QPSK Modulation Is an Obvious Limitation.

Complainants' expert, Dr. Katti, offered no testimony to rebut Dr. Heegard's conclusion that it would be obvious for a person of skill in the art to incorporate QPSK modulation into the system of Prasad. *See* CX-1641C (Katti RWS) at QA 291 (opining only that Prasad fails to meet M>N limitation of claim 22). Indeed, Dr. Katti testified at trial that QPSK modulation was known to persons of ordinary skill in the art prior to the invention date of the '958 patent. Hg. Tr. (Katti) at 1855:21-25. Moreover, Dr. Katti conceded that "QPSK . . . is a type of Phase Shift Keying" that would be obvious to a person of skill in the art from a disclosure of another form of phase-shift keying. CX-1641C at QA 142. Because Prasad discloses a "multitone, DPSK [differential phase-shift keying]" system, there is no dispute that it would have been obvious for a person of skill in the art to apply QPSK modulation to the system of Prasad. RX-0590 (Prasad – Data Transmission) at 837MEDIATEK000023287.

c. Complainants Concede that a Scrambler Is an Obvious Limitation.

Dr. Katti agreed that scramblers were known to persons of ordinary skill in the art prior to the invention date of the '958 patent. Hg. Tr. (Katti) at 1855:16-20. He also testified that a person of

ordinary skill would find a "scrambler" to be disclosed in any kind of digital communication system. CX-1641C (Katti RWS) at QAs 143-144. Thus, the parties agree that a person of ordinary skill in the art would find a scrambler to be at least obvious from the disclosure of a digital communication system.

d. The Use of a Sequence of the Form ABAB' Is an Obvious Limitation.

At trial, Dr. Katti agreed that the limitation of "a complementary code defined by the sequence ABAB'" simply referred to Marcel Golay's original "rule for length expansion" of complementary codes. Hg. Tr. (Katti) at 1818:20-1819:10. Dr. Katti also conceded that the '958 patent cited Golay's 1961 paper (RX-0563 (Golay – Complementary Series)) as prior art, and that multiple other references had cited Golay's paper for the ABAB' expansion rule. Hg. Tr. (Katti) at 1822:11-19, 1823:6-12. Accordingly, Golay's rule that combining the complementary codes A and B in the form ABAB' (among other forms) would generate a new, longer complementary code was well known to persons of ordinary skill in the art at the time of the '958 patent. *See* RX-0563 (Golay – Complementary Series) at 837MEDIATEK000005404-05 (explaining as method of "general synthesis" that complementary series may be "formed by appending the series A and B, and the series A and B'"). Complainants concede that the ABAB' "sequence[] existed in the art." Compl. Resp. to Funai's Pet. at 55.

Moreover, although Complainants argue that the significance of this limitation "is not the ABAB' sequence itself . . . but the fact it could be used to generate more complementary sequences." In fact, Dr. Katti admitted at trial that the specification of the '958 patent does not even disclose the generation of new or longer complementary sequences using the ABAB' form. Hg. Tr. (Katti) at 1819:15-1820:3. Instead, the ABAB' form appears only as an incidental property of the complementary code {111-111-11111-1-1-11-1} disclosed in Table 3 of the patent, with no discussion of accompanying benefits or properties. JX-0003 ('958 patent) at col. 6:17-20.

Accordingly, because Prasad teaches a recursive procedure for generating code sets from any complementary code, it would be obvious for a person of ordinary skill in the art to implement the Prasad system using *any* complementary code word, including one of the form ABAB'. RX-0006C (Heegard Witness Statement) at QAs 525-527. In any event, as discussed above, although irrelevant to the teachings of the '958 patent, the fact that two short complementary sequences could be combined in the form ABAB' was well known in the art.[27]

e. Prasad Is Analogous Art To the '958 Patent.

Despite conceding that Prasad discloses nearly all asserted claim limitations of the '958 patent, Complainant nevertheless argues vaguely that Prasad should be discounted as a prior art reference because it is a "multi-carrier system" and therefore "a different type of communication system compared to the '958 patent." CX-1641C (Katti RWS) at QAs 171-172. Complainant's argument is not only irrelevant to an actual analysis of the claim language; it also contradicts Complainants' own positions regarding the '182 patent, which also discloses a multi-carrier system.

Dr. Katti describes Prasad as disclosing a modulation system that "map[s] incoming data bits into codewords that are simultaneously modulated over multiple carriers," as opposed to the "single-carrier system" of the '958 patent *Id.* However, as explained above, the fact that Prasad discloses a multi-carrier system has no actual effect on whether the system anticipates or can be modified to anticipate any of limitations of the asserted claim, and Complainants do not argue that it does. Moreover, as Dr. Katti admitted, the '574 patent application, which Complainants argue provides written description to support all asserted claims of the '958 patent, also relates to a multi-carrier system. Hg. Tr. (Katti) at 1912:23-1913:5. Therefore, to the extent Complainant intends to imply that Prasad is non-analogous art to the '958 patent, Complainant's positions with respect to Prasad

[27] Dr. Heegard's denigration of the ABAB' limitation at the hearing does not support the non-obviousness of the limitation, contrary to the ID's conclusion. ID at 214. Dr. Heegard's testimony that the ABAB' limitation was "arbitrary" does not make it a non-obvious addition. Hg. Tr. (Heegard) at 1145:3-6.

and the ’574 application are entirely irreconcilable. *KSR Int'l Co. v. Teleflex Inc.*, 550 U.S. 398, 417 (2007) (“When a work is available in one field of endeavor, design incentives and other market forces can prompt variations of it, either in the same field or a different one. If a person of ordinary skill can implement a predictable variation, § 103 likely bars its patentability.”).

3. The Record Evidence Establishes that the Combination of the Harris Proposal in View of the van Nee article Renders the Asserted Claims of the ’958 Patent Obvious.

Based on the ALJ’s determination as to the priority date of the asserted claims, the ID rejects the obviousness of the asserted claims based on the combination of the Harris Proposal and van Nee 1996 only on the ground that these references are not prior art. ID at 215. But the ID’s priority determination is incorrect and the Harris Proposal and van Nee 1996 are prior art that render the claims obvious. RX-0006C (Heegard Direct WS) at QA 359-420, 478-84, 643-63.

a. Overview of the Harris Proposal.

The Harris Proposal was presented to the IEEE 802.11 Working Group and made publicly available at least as early as November 10, 1997. RX-0001 (Andren WS) at QAs 25-26. Accordingly, to the extent that the asserted claims are entitled to a priority date of 1998 and not 1996, the Harris Proposal is prior art to the asserted claims pursuant to 35 U.S.C. § 102(b).

As discussed, the Harris Proposal discloses the same digital modulation system that formed the basis for the ’958 patent. Accordingly, the asserted limitations of the ’958 patents relating to the functional elements of the claimed modulation system – including a scrambler, a serial-to-parallel converter, a modulator that chooses a code in response to a group of data bits, and a mixer that performs QPSK modulation – are present in the Harris Proposal. RX-0006C (Heegard WS) at QAs 374-379, 393-407. Complainants do not dispute this; instead, they argue that the only limitations not disclosed by the Harris Proposal are “(1) a code set in which the number of codes is greater than the number of chips in each code; (2) ‘autocorrelation sidelobes suitable for multipath environments’ [and] (3) a code set ‘derived from a complementary code.’” CX-1641C (Katti RWS) at QA 214.

Complainants draw a false distinction over the Harris Proposal. Complainants suggest that the IEEE adopted the ’958 patent as the 802.11b standard and therefore rejected the Harris Proposal in view of the subject matter of the ’958 patent. Compl. Resp. to Funai’s Pet. at 56. But there is no showing by Complainants that the standard is the ’958 patent.

b. Overview of van Nee 1996.

Richard van Nee, “OFDM Codes for Peak-to-Average Power Reduction and Error Correction” (“van Nee 1996”) (RX-0614 (van Nee – OFDM Codes)) was published in *Global Telecommunications Conference*, 1996, and publicly available no later than December 6, 1996. RX-1352 (Ellett Declaration) ¶ 19. Accordingly, to the extent that the asserted claims are entitled to a priority date of 1998 and not 1996, van Nee 1996 is prior art to the asserted claims pursuant to 35 U.S.C. § 102(b). van Nee 1996 discloses a multi-carrier digital communication system that maps 4 input phase shifts (ϕ_1, ϕ_2, ϕ_3 and ϕ_4) to 8 output phases transmitted over N=8 discrete frequency sub-channels. RX-0614 (van Nee – OFDM Codes) at 837MEDIATEK000005422-23. van Nee 1996 refers to this transformation as a “complementary code” that can be described with the equation:

$$c = \{e^{j(\varphi_1+\varphi_2+\varphi_3+\varphi_4)}, e^{j(\varphi_1+\varphi_3+\varphi_4)}, e^{j(\varphi_1+\varphi_2+\varphi_4)}, -e^{j(\varphi_1+\varphi_4)}, e^{j(\varphi_1+\varphi_2+\varphi_3)}, e^{j(\varphi_1+\varphi_3)}, -e^{j(\varphi_1+\varphi_2)}, e^{j\varphi_1}\}$$

Id. This is the same equation that is used to describe a portion of the process of mapping data bits to individual code words within the CCK scheme of the 802.11b standard. CX-0116C (802.11b Standard) at CX-0166C.0723-2.4

c. Complainants Agree van Nee 1996 Discloses or Renders Obvious All Asserted Claims.

Complainants concede that if van Nee 1996 is prior art to the ’958 patent, it would disclose or renders obvious every asserted claim limitation of the ’958 patent, including the elements they claim are not disclosed in the Harris Proposal. Complainants’ expert, Dr. Katti, testified:

> Q. Okay. Now, in your opinion, then, if the van Nee 1996 paper were prior art, it would disclose or render obvious every asserted limitation of the ’958 patent asserted claims, right?
>
> A. If the priority date -- if the date for the ’958 patent was 1998, then this would be prior art and in that case, yes it would.

Hg. Tr. (Katti) at 1877:9-16. As discussed above, the proper priority date of the asserted claims of the ’958 patent is in fact 1998, not 1996. Accordingly, if the priority date is found to be 1998, by Complainants’ own admission, the asserted claims are disclosed or rendered obvious by van Nee 1996. Because Complainants do not rebut Dr. Heegard’s analysis determining that a person of ordinary skill would have been motivated to combine the Harris Proposal and van Nee 1996 other than to contest priority date, Complainants also effectively concede that the combination of the Harris Proposal and van Nee 1996 renders the asserted claims obvious. RX-0006C (Heegard WS) at QA 651.

Instead of distinguishing van Nee 1996 from the ‘958 patent, Complainants argue that because “the disclosure of van Nee 1996 is similar to that of the ‘182 patent,” it is “highly inconsistent for Respondents to argue that the ‘182 patent fails to disclose the claims of the ‘958 patent and simultaneously argue that van Nee 1996 renders those claims obvious.” Compl. PrHB at 643. However, Complainants’ arguments are not well founded, because “[a] disclosure in a parent application that merely renders a later-claimed invention obvious is not sufficient to meet the written description requirement.” *Tronzo v. Biomet*, 156 F.3d 1154, 1158 (Fed. Cir. 1998). The fact that the asserted claim limitations may be *obvious* to a person of skill in the art in 1998 does not overcome the fact that the asserted claims were not *actually* described in the ‘182 patent. Because Respondents have presented clear and convincing evidence of obviousness and Complainants have put forth no countervailing evidence, the asserted claims of the ‘958 patent are rendered obvious by the combination of van Nee 1996 and the Harris Proposal. RX-0006C (Heegard Direct WS) at QAs 650-663.

Complainants argue that Funai's reliance on van Nee's own paper demonstrates the non-obviousness of the asserted claims. Compl. Resp. to Funai's Pet. at 57. But this argument is irrelevant, as it is assumed and shown that van Nee's paper is prior art with a 1996 publication date.[28]

4. The Record Evidence Establishes that the Combination of the Proakis Textbook in View of the Weathers Patent Renders the Asserted Claims of the '958 Patent Obvious.

The ALJ erroneously concluded (ID at 215-216), that the combination of Proakis and Weathers renders obvious the asserted claims of the '958 patent obvious under either parties' proposed constructions. RX-0006C (Heegard WS) at QAs 433-454, 542-620.

a. Proakis Discloses a Digital Modulation System and Its Components.

John. G. Proakis, Digital Communications (3d ed.) ("Proakis") (RX-1349 (Proakis – Digital Communications)) is the 1995 edition of a textbook for students and practicing engineers involved in the design of digital communications. RX-0006C (Heegard WS) at QAs 438-439. Proakis is prior art to the asserted claims pursuant to 35 U.S.C. § 102(b). *Id.*

Proakis discloses the basic components of a digital modulation system, including:

A serial-to-parallel converter that groups the data bits (claims 22, 29) (RX-0006C (Heegard WS) at QAs 547-549);

A modulator that chooses a code having N chips in response to the group of data bits, the code being a member of a code set that includes M codes, wherein M>N (claims 22, 29, 32, 35) (RX-0006C (Heegard Witness St.) at QAs 442-443, 550-553));

A mixer that modulates a carrier signal in accordance with the chosen code (claim 23) (RX-0006C (Heegard WS) at QAs 445, 561-562);

[28] Complainants argue that "[i]t is inconsistent to argue that the '182 Patent fails to disclose the claims of the '958 Patent and also argue that van Nee 1996 renders those claims obvious." Comp. PostHB at 412. Complainants, however, confuse the requirements written description support (must be explicit or inherent) and obviousness.

A mixer that modulates the phase of at least one carrier signal in accordance with the selected code (claim 24) (RX-0006C (Heegard WS) at QAs 445, 563-564); and

The phase of the at least one carrier signal is QPSK modulated in accordance with the selected code (claim25) (RX-0006C (Heegard WS) at QAs 445, 565-566).

Complainants do not dispute that Proakis discloses a digital modulation system containing all of the above limitations. Moreover, Complainants do not dispute that a person of ordinary skill in the art would find it obvious to combine the system of Proakis with a "scrambler for scrambling the group of data bits" (claims 26, 32, 35).

b. Weathers Discloses "Group-Complementary Codes" with "Optimum Autocorrelation" Properties.

U.S. Patent No. 4,513,288 by G. D. Weathers and E. M. Holliday is assigned to the United States government as represented by the Secretary of the Army. RX-0099 (Weathers '288). The title of the patent is "Group-Complementary Code Sets for Implementing Pulse-Compression Processing with Optimum Aperiodic Autocorrelation and Optimum Cross-Correlation Properties." *Id.* Because the patent issued on April 23, 1985, Weathers is prior art to the asserted claims pursuant to 35 U.S.C. § 102(b). *Id.*; RX-0006C (Heegard WS) at QA 452.

As indicated in its title, Weathers teaches a method of digital modulating radio signals using "group-complementary code sets." Specifically, Weathers discloses code sets of K codes, each N bits in length, where K>N. RDX-0006C.053.

Weathers discloses "a code set that includes M codes, wherein M>N." RX-0006C (Heegard WS) at QA 595. Complainants' assertion that the KxN matrices in Weathers are "single codes" and not sets of codes (i.e., that M=1 and not K) is plainly false. *See* CX-1641C (Katti RWS) at QA 309; Compl. Resp. to Funai's Pet. at 57. The patent states that "*[e]ach row* [of the matrix] is a code word used to encode each of K radio-frequency pulses using bi-phase modulation." RX-0099 (Weathers '288) at 3:36-37.

Complainants do not dispute that the code sets in Weathers are "derived from a complementary code." However, with respect to the phrase "autocorrelation sidelobes suitable for multipath environments," even though Weathers describes its code sets as having "very low or zero temporal sidelobes in the autocorrelation function" (*Id.* at 2:27-31)—language nearly identical to Complainants' own interpretation of the limitation (CX-1596 (Negus Direct WS) at QA 231)—Complainants nevertheless argue that Weathers fails to disclose the limitation because "Weathers is directed toward outdoor radar technology." CX-1641C (Katti RWS) at QA 309. As discussed above, Complainants' argument is yet another example of their inability to identify a consistent, definite construction for this limitation. Moreover, because Dr. Katti conceded at trial that "multi-path effects can exist both in indoor and outdoor scenarios," Hg. Tr. (Katti) at 1853:5-9, it is unclear Complainants' argument would be relevant even if it applied the proper construction. Accordingly, to the extent that the term "autocorrelation sidelobes suitable for multipath environments" is definite, it is disclosed by Weathers.

Finally, as discussed above with respect to Prasad, the limitation of a complementary code of the form "ABAB'" is merely an obvious form of a complementary code that provides no unexpected benefits. Because Weathers teaches multiple methods of generating group-complementary code sets from "seed" matrices (RX-0099 (Weathers '288) at 6:14-51), it would be obvious for a person of ordinary skill in the art to generate a code set according to the teachings of Weathers using any complementary code word, including one of the form ABAB'. RX-006C (Heegard WS) at QA 604.

c. A Person of Ordinary Skill in the Art Would Have Found It Obvious To Combine Proakis and Weathers to Arrive at the Asserted Claims.

Because Proakis discloses or renders obvious all limitations relating to the components of the claimed digital modulation system, and Weathers discloses or renders obvious all limitations relating to the code set used by that system, a person of ordinary skill in the art could combine the system of Proakis with the code sets of Weathers to arrive at all asserted claims. *Id.* at QA 591. Complainants'

cursory statement that Weathers is non-analogous art because it teaches a "pulse compression radar system" (CX-1641C (Katti RWS) at QA 309) is not well founded. Weathers discloses a set of binary code words that are useful for modulating carrier waves because of their optimized autocorrelation and cross-correlation properties. *See*, e.g., RX-0099 (Weathers '288) at 2:24-41. In other words, the very purpose for which the system of Weathers was designed was to improve coding performance in multipath environments. *Id.* at 10:32-44 (summarizing "advantages of group-complementary code sets" as "reduced sensitivity to . . . multi-target returns through optimized autocorrelation" and "reduced sensitivity to mutual interference through orthogonal code sets"). Accordingly, a designer of a coding system seeking code sets that performed favorably in multipath environments would have no reason not to consider the code sets of Weathers. *KSR*, 550 U.S. at 417. Because Complainants' own interpretation of the term "autocorrelation sidelobes suitable for multipath environments" requires only "low" autocorrelation sidelobes," (Hg. Tr. (Katti) at 1846:7-18), Proakis and Weathers together disclose all asserted claim elements.

5. Secondary Considerations Do Not Weigh In Favor of Nonobviousness.

As the ID concluded, "[t]he evidence cited by Complainants, however, consists primarily of expert testimony from Dr. Negus, and fails to establish the requisite nexus between the alleged secondary considerations and the '958 patent." ID at 217.

Complainants' validity expert, Dr. Katti, rests his entire opinions on secondary considerations on the testimony of Complainants' infringement expert, Dr. Negus. CX-1641C (Katti RWS) at QAs 752-754. As an initial matter, Complainants' evidence on secondary considerations should be given no weight. Complainants' (Fed. R. Civ. P. 30(b)(6)) corporate witness on the subject, [redacted] including the '867 patent. JX-043C ([redacted]) at 499:4-501:15. At the hearing, [redacted] LSI's counsel attempted to walk back that prior testimony by [redacted]

[redacted] at 242:21-245:2), and notwithstanding that [redacted]. Yet [redacted] *Id.* at 266:23-25. Nor did Complainants, in the nearly seven months between [redacted] corporate deposition and the beginning of the hearing, offer additional factual testimony, or indeed even suggest that there was additional factual testimony to be had. As the ALJ indicated, [redacted] and Complainants' expert witness is "an indication of the persuasive value of the [expert's] opinions," namely zero. Order No. 79 at 2.

In addition, there is no proper foundation for Complainants' contention of secondary considerations of nonobviousness. Dr. Negus offered no documentation or data to substantiate his opinions on secondary considerations. CX-1643C at QAs 6-38. With regard to the commercial success factor, Dr. Negus based his opinions on products outside this investigation for which he did not provide any evidence other than his own testimony. Hg. Tr. (Negus) at 1919:19-1920:12; 1921:22-1922:13. Dr. Negus never did any kind of analysis of how factors other than the accused CCK modualation may account for the commercial success of the products. *Id.* at 1920:13-18.

With regard to the failure of others factor, Dr. Negus conceded that others were able to achieve the rate of CCK modulation through other ways, and Dr. Negus conceded there was an acceptable alternative to CCK. *Id.* at 1921:2-11.

With regard to the copying factor, copying of CCK modulation is not necessarily copying of the '958 patent. *Id.* at 1921:12-21.

With regard to the praise for the invention factor, praise for CCK modulation is not necessarily praise for the '958 patent. *Id.* at 1922:14-1923:16. Dr. Negus was not familiar with any

industry recognition for the ’958 patent. *Id.* at 1920:19-23. Dr. Negus was not familiar with any industry recognition for the named inventor of the ’958 patent. *Id.* at 1920:24-1921:1.

Ultimately, Dr. Negus did not provide any documentation to support his opinions on secondary considerations. *Id.* at 1921:22-1922:13; 1928:22-1929:22. As recounted above, Dr. Negus has never heard anyone praise CCK coding, or use it outside of this extremely narrow context, and CCK coding was just one of several proposed systems that all achieved the same goal, as acceptable alternatives to CCK coding. There is nothing that would weigh in favor of nonobviousness of the asserted claims of the ’958 patent and the evidence shows obviousness of the claims. RX-0006C at QAs 666-677.

VII. Question 10

> **What record evidence supports or does not support the conclusion that U.S. Patent Application No. 08/155,661 was abandoned in December 2001 because the applicant failed to file a reply to the Office Action mailed on June 7, 2001 within the six-month statutory deadline (35 U.S.C. § 133)? Please discuss and cite the record evidence, if any, showing proof of the USPTO's grant of an extension in December 2001.**

A. The Record Evidence Supports the Conclusion that U.S. Patent Application No. 08/155,661 was Abandoned in December 2001 because the Applicant Failed to File a Reply to the Office Action Mailed on June 7, 2001 Within the Six-Month Statutory Deadline (35 U.S.C. § 133).

The ID incorrectly concludes that the priority date of the asserted claims of the ’958 patent is March 6, 1993. ID at 288-289.

The application that led to the ’867 patent (“the ’867 application”) was filed on March 7, 2002 and claims priority as a continuation of U.S. Application No. 08/155,661 (“the ’661 application”), filed on November 22, 1993. The ’867 patent, however, is not entitled to this 1993 priority date because the applicant allowed the ’661 application to go abandoned before filing the ’867 application. The ’661 patent application was abandoned in December 2001. RX-1165.0233 (Notice of Abandonment for failure to respond to the June 2001 Office Action). The Patent Office

confirmed this in 2003 when it issued a Notice of Abandonment that the ’661 application was abandoned in December 2001. The applicant never disputed this Notice of Abandonment.[29]

1. Timeline of Events Leading to Abandonment

After a series of rejections and responses, on June 7, 2001 the United States Patent and Trademark (“PTO”) Examiner issued a non-final Office Action and rejected all pending claims in the ’661 application. RX-1165 at RX-1165.0213. The Office Action notified the Applicants that a reply to the Office Action was due within three months. The Office Action also stated that, pursuant to 35 U.S.C. § 133, the ’661 application would go abandoned if no reply was filed within six months. RX-1165 at RX-1165.0214. Thus, unless the Applicants filed a reply by December 7, 2001, six months after the June 7, 2001 Office Action, the ’661 application would have gone abandoned as of December 7, 2001. Id. (“In no event, however, may a reply be timely filed after SIX (6) MONTHS from the mailing date of this communication.”).

The ’661 prosecution history does not contain any reply to the June 7, 2001 Office Action rejecting all of the claims. Although the table of contents of the ’661 application prosecution history refers to an extension of time and Notice of Appeal, no such documents appear in that prosecution history. In fact, the table of contents identifies the date of both documents as January 8, 2002, one month after the December 7, 2001 statutory deadline to respond to the June 2001 Office Action.

26.	Ext. of Time (3)	1/8/02 (CM 12-7-01)
27.	Notice of Appeal	1/8/02

RX-1165 at RX-1165.0005.

Even if the “CM 12-7-01” annotation next to the entry for a request for extension is read to suggest that a request for an extension of the reply deadline (*i.e.*, from September 7, 2001 to

[29] Because the ’867 patent cannot claim priority to the non-co-pending ’661 patent application, the priority date of the ’867 patent is March 7, 2002, the date on which the application for the patent was filed. 35 U.S.C. § 120.

December 7, 2001) was mailed by December 7, 2001, no such entry exists for the corresponding Notice of Appeal. Accordingly, there is no indication in the prosecution history that a reply to the June 7, 2001 Office Action was timely filed by December 7, 2001, even if the table of contents contains some evidence that the USPTO granted an extension in December 2001.

There is no official record of any reply to the June 7, 2001 Office Action. As discussed further below, notwithstanding the table of contents in the ’661 prosecution history, the PTO Examiner subsequently issued a Notice of Abandonment for failure to respond to the June 7, 2001 Office Action. Furthermore, at no time did the applicants for the ’661 application seek to revive the ’661 application after its abandonment.

Two months after the applicants abandoned their ’661 application, the same applicants filed the ’867 application on March 7, 2002. JX-0006.0002. The ’867 application claims priority to the ’661 application. JX-0006.0044. This priority claim was not considered by the PTO at this time. JX-0006; *see also* JX-0006.0069.

After ’867 application was filed, the same PTO Examiner examining that application issued a Notice of Abandonment for the ’661 application on October 27, 2003. Complainants argue that “At best, the Notice of Abandonment implies that the parent application was abandoned in April 2003 …” Compl. Resp. at Funai’s Pet. at 60. This is belied by the record. The Notice of Abandonment indicates that the ’661 application was abandoned for the applicant’s failure to file a reply to the June 7, 2001 Office Action:

Notice of Abandonment	**Application No.** 08/155,661	**Applicant(s)** DIEPSTRATEN ET AL.	
	Examiner Tesfaldet Bocure	**Art Unit** 2631	

-- The MAILING DATE of this communication appears on the cover sheet with the correspondence address--

This application is abandoned in view of:

1. ☒ Applicant's failure to timely file a proper reply to the Office letter mailed on *07 June 2001*.
   (a) ☐ A reply was received on _____ (with a Certificate of Mailing or Transmission dated _____), which is after the expiration of the period for reply (including a total extension of time of _____ month(s)) which expired on _____.
   (b) ☐ A proposed reply was received on _____, but it does not constitute a proper reply under 37 CFR 1.113 (a) to the final rejection.
   (A proper reply under 37 CFR 1.113 to a final rejection consists only of: (1) a timely filed amendment which places the application in condition for allowance; (2) a timely filed Notice of Appeal (with appeal fee); or (3) a timely filed Request for Continued Examination (RCE) in compliance with 37 CFR 1.114).
   (c) ☐ A reply was received on _____ but it does not constitute a proper reply, or a bona fide attempt at a proper reply, to the non-final rejection. See 37 CFR 1.85(a) and 1.111. (See explanation in box 7 below).
   (d) ☒ No reply has been received.

RX-1165 at RX-1165.0233 (Notice of Abandonment for failure to respond to the June 2001 Office Action).

The applicants for the ’661 application did not seek to correct the Notice of Abandonment. Thus, the applicants did not dispute that the ’661 application was abandoned on December 7, 2001 for failure to respond to the June 7, 2001 application, and was therefore not co-pending with the ’867 application when it was filed on March 7, 2002.

2. The Applicable Law Compels a Finding of Abandonment

Statutory Patent Law requires that applicants timely prosecute their patent applications. By statue, patent applications are regarded as abandoned if an applicant fails to reply to an Office Action by the PTO within six months of the Office Action. 35 U.S.C. § 133 (emphasis added).

The PTO has promulgated rules to implement the statutory mandate of 35 U.S.C. § 133. The Patent Rules clarify that “[p]rosecution of any application to save it from abandonment” must include “such complete and proper reply as the condition of the application may require,” such as a reply brief or a request for oral hearing. 37 C.F.R. 1.135(b), 1.136(a).[30] The Rules further state that while extensions to a shortened, non-statutory reply period may be granted, “in no situation may an applicant reply later than the maximum time period set by statute.” 37 C.F.R. 1.136(b). No

[30] “The reply by the applicant or patent owner must be reduced to a writing.” 37 C.F.R. § 1.111.

extensions are available beyond the statutorily mandated six month deadline for responding to an Office Action. *Id.*

Respondents have carried their prima facie burden of showing that the ’867 patent is not entitled to the filing date of the ’661 application as the patent’s priority date because the ’661 application was abandoned by December 7, 2001 and was not co-pending when the ’867 application was filed on March 7, 2002. Respondents have carried their prima facie burden of showing that the ’661 application went abandoned by the six-month statutory deadline of December 7, 2001 because the file history of the ’661 application does not contain a timely reply by December 7, 2001, and the Notice of Abandonment confirms there was no such timely reply.

Complainants cannot carry their rebuttal burden to show that the ’661 application was not abandoned by December 7, 2001 and that the priority date of the ’867 patent is November 22, 1993. In order to rebut the abandonment of the ’661 application (and inability for the ’867 patent to rely on the filing date of the ’661 application as the ’867 patent’s priority date), Complainants may rely on circumstantial evidence to allege that an issue of fact exists concerning the abandonment of the ’661 application. But Complainants will be unable to offer any evidence that a timely reply was in fact submitted to the Patent Office by December 7, 2001, the six-month statutory deadline for a reply or abandonment. Although the table of contents in the ’661 prosecution history includes an entry for a Notice of Appeal, this entry is dated January 8, 2002, and would not have been timely if filed on that date. Indeed, the Examiner’s subsequent issuance of a Notice of Abandonment explicitly states that no reply was timely filed, which is consistent with this record.

VIII. Question 11

Please discuss and cite any record evidence of the standard essential nature of the ‘663, the ‘958, and the ‘867 patents.

A. Complainants Are Judicially Estopped From Claiming the ‘663, ‘958 and ‘867 Patents Are Not Standard Essential

Complainants have asserted that the '958 and '867 patents are infringed simply by practicing different aspects of the IEEE 802.11 standard. Additionally, Complainants have asserted that the '663 patent is infringed simply by practicing the H.264 standard. Furthermore, in their discovery responses, Complainants have asserted that these patents are essential to the respective standards. In particular, Complainants responded as follows to Funai's Interrogatory No. 88:

> 88. With respect to any standards or specifications identified in your response to Interrogatory No. 86, identify which, if any, of the patents-in-suit are essential or necessary to comply with such standards or specifications.
>
> A. U.S. Patent Nos. 6,452,958 and 6,707,867 are essential or necessary to comply with one or more versions of the IEEE 802.11 Standard for communication over a Wireless Local Area Network. U.S. Patent No. 6,982,663 is essential or necessary to comply with certain profiles and provisions of the ISO/IEC 14496-10 AVC / ITU-T H.264 standard.

RX-2472C.

Additionally, Complainants submitted declarations and assurances to the ITU (International Telecommunication Union) and the IEEE (Institute for Electrical and Electronics Engineers) indicating the standards essential nature of these patents. *See* RX-0009C at QA 70-114; RX-0740; RX-1142; RX-1161C; RX-1130C; RX-1139; RX-1162. Complainants received economic and judicial benefits from these representations to the IEEE and ITU, and have therefore contractually bound themselves to the licensing obligations of these standards setting organizations. *See* RX-1140; RX-1141.

However, notwithstanding Complainants' insistence to the standard-setting bodies as well as in this litigation as to the standard essential nature of these three asserted patents, the ID correctly recognized that practicing the 802.11 or the H.264 standards will ***not*** necessarily result in the infringement of the asserted claims. Consequently, as explained further below, the evidence of

record does not support the "standard essential nature" of the '663, the '958, and the '867 patents.[31] However, based on their prior representations, Complainants should be judicially and equitably estopped from asserting otherwise.

B. Notwithstanding Complainants Position, The '958 Patent is Not Essential to Practice the IEEE 802.11 Standard

As recognized in the ID, LSI accused Respondent' products of infringing the asserted claims of the '958 patent through their implementation of the CCK 11 Mb/s modulation pursuant to the 802.11 b standard. *See, e.g.*, CX-1596C at Q&A 135. The encoding scheme used in the 802.11 standard is known as "complementary code keying," or CCK for short. CCK encoding differs from the '958 patent in many ways, but one of the most important ways is that the CCK scheme requires use of a "complex," or multi-part code, while the '958 patent explicitly defines its codes as being binary, or "real."

As acknowledged [redacted]. RX-1788C at 49:17-50:8. LSI's expert, Dr. Negus, has not opined in this Investigation that compliance with CCK modulation alone infringes the '958 patent. Hg. Tr. (Negus) at 418:15-419:10.

CCK modulation according to the IEEE 802.11 b standard involves selecting complex, not real, codes. The standard describes each CCK code word as "8 complex chips" long:

[31] If, however, these patents are found to be essential to the standards, LSI has failed to satisfy its obligations to license those patents on fair, reasonable and nondiscriminatory (FRAND) terms. *See* Funai's Submission on Remedy, Bond, and the Public Interest.

18.4.6.5 Spreading sequences and modulation for CCK modulation at 5.5 Mb/s and 11 Mb/s

For the CCK modulation modes, the spreading code length is 8 and is based on complementary codes. The chipping rate is 11 Mchip/s. The symbol duration shall be exactly 8 complex chips long.

The following formula shall be used to derive the CCK code words that shall be used for spreading both 5.5 Mb/s and 11 Mb/s

$$c = \{e^{j(\varphi_1+\varphi_2+\varphi_3+\varphi_4)}, e^{j(\varphi_1+\varphi_3+\varphi_4)}, e^{j(\varphi_1+\varphi_2+\varphi_4)}, -e^{j(\varphi_1+\varphi_4)}, e^{j(\varphi_1+\varphi_2+\varphi_3)}, e^{j(\varphi_1+\varphi_3)}, -e^{j(\varphi_1+\varphi_2)}, e^{j\varphi_1}\} \quad (18\text{-}1)$$

where C is the code word

C = {c0 to c7}

The terms φ1, φ2, φ3, and φ4 are defined in 18.4.6.5.2 for 5.5 Mb/s and 18.4.6.5.3 for 11 Mb/s.

This formula creates 8 complex chips (c0 to c7), where c0 is transmitted first in time.

This is a form of the generalized Hadamard transform encoding, where φ1 is added to all code chips, φ2 is added to all odd code chips, φ3 is added to all odd pairs of code chips, and φ4 is added to all odd quads of code chips.

The term φ1 modifies the phase of all code chips of the sequence and shall be DQPSK encoded for 5.5 Mb/s and 11 Mb/s. This shall take the form of rotating the whole symbol by the appropriate amount relative to the phase of the preceding symbol. Note that the chip c7 of the symbol defined above is the chip that indicates the symbol's phase and is transmitted last.

CX-0116C at CX-0166C.0723-24.

Each "complex chip" is a pair of bits, one representing the real component of a complex value and the other representing the imaginary component. RX-2813C at QA 142-44; RX-2813C-1 at QA 2.

Because the two bits of a "complex chip" represent the real and imaginary components of a complex value, each CCK codeword represents a complex value. RX-2813C at QA 142-44, 167, 169-74. Even Dr. Negus acknowledges this is "complex-valued notation," in which the "a 'complex value' is expressed as a real part plus an imaginary part." RX-1596C at QA 78-80.

When describing CCK modulation, Dr. Negus invented new terminology to avoid using the word "complex codes," stating instead that CCK modulation involved a code set of 64 codes of "8 phase-modulation chips" in length. CX-1596C at QA 84-87. His own paper on CCK, however, described CCK modulation as "pick[ing] one of 64 complex codes." RX-2836 at 8; Hg. Tr. (Negus)

at 326:16-328:22. He also acknowledged that the CCK waveform is a "complex" waveform "defined to determine the complex chip code." Hg. Tr. (Negus) at 333:8-334:9. He further acknowledged several examples of references referring to CCK modulation as having "complex codes," but could identify nothing that refers to CCK as having real codes. *Id.* at 314:14-315:3. 334:16-335:1. This is because each "complex chip" in a CCK codeword does not represent a binary, real value, and each CCK codeword does not represent a real value. RX-2813C at QA 85, 144.

In the prior *Agere v. Sony* litigation Complainants tried unsuccessfully to redefine the real codes of the '958 patent as complex codes (RX-1435 at 8); now they try to redefine the complex codes of CCK modulation as real codes. Dr. Negus now opines that "when it comes to the actual chips that are used to form code sequences, these chips are always real-valued . . . ." RX-1596C at QA 81; *see also id.* at QA 82-83, 206-08. He reasons in this Investigation that each bit is real so each bit always represents a real number. Hg. Tr. (Negus) at 353:7-354:4; 355:6-9.

Dr. Negus' attempt to fashion "a sequence of chips representing a real value" by focusing on isolated bits of a complex code runs afoul of the very definition of CCK modulation. Each CCK code word in the accused products is a sequence of "complex chips" with a real part and an imaginary part that together represent a complex value. RX-2813C at QA 142-44. In the prior litigation, however, [redacted] Hg. Tr. (Negus) at 343:6-344:5; *see also id.* at 344:6-14 [redacted]. Furthermore,

Because each CCK codeword is a complex codeword representing a complex value, rather than a real value, the ID correctly concluded that practicing the CCK modulation as required by the 802.11 standard does not necessarily result in the infringement of the '958 patent. ID at 63-66.

C. Notwithstanding Complainant's Position, The '867 Patent is Not Essential to Practice the IEEE 802.11 Standard

For the '867 patent, LSI relied upon the timing synchronization functionality of the 802.11 standard to support its infringement allegations. In the '867 patent, a timestamp is used for synchronization in the context of timers or counters that roll over or reset upon reaching the transmission signal interval value. Hg. Tr. (Negus) at 435:17-24. This permits a receiver to know when to expect the next transmission signal in the next transmission signal interval and wake up at the expected time. As recognized in the ID, the IEEE 802.11 standard describes a substantially different paradigm for synchronization. ID at 242.

In 802.11, the Beacon interval (transmission signal interval) is 2^{16}, but the standard timestamp is given the value of a transmitter counter that counts up to 2^{64} and thus will not be within the Beacon interval. CX-0116C at LSIAgere837-01170257 (Section 7.3.1.3), LSIAgere837-011700588 (Section 11.1.2); RX- 2813C at QA 351-57. Typically, by implementing 802.11, the counters in the accused products would not operate long enough to reach a maximum value of 264 to roll over or reset. Hg. Tr. (Negus) at 437:16-438:2. The accused products do not use a timestamp to inform the receiver of the expected time of the next transmission signal, so that the receiver need only wake up at the expected time of the next transmission signal. Rather than using a timestamp to inform a receiver of the next expected Beacon signal so that a receiver need only wake up the expected time of the next Beacon signal, the IEEE 802.11 standard provides for a different kind of synchronization by which a receiver can only estimate roughly when the next Beacon may arrive. Hg. Tr. (Heegard) at 1161:10-1164:2; RX-2813C at QA 351-57, 365, 392.

The ID therefore correctly concluded that practicing the timing synchronization required by the 802.11 standard does not necessarily result in the infringement of the '867 patent. ID at 242-243.

D. Notwithstanding Complaintant's Position The '663 Patent is Not Essential to Practice the H.264 Standard

LSI has relied upon the H.264 standard for video encoding and decoding for its infringement allegations for the '663 patent. In particular, LSI has argued that "the asserted claims of the '663

Patent represent the only commercially viable methodology for decoding the UEGk encoded index values described in the H.264 Standard," and "[a]s a result, any commercial product that performs decoding of H.264-compliant video streams utilizing UEGk encoded index values necessarily practices the asserted claims of the '663 Patent." Compls. Br. at 218-219. The record evidence does not support this conclusion because the H.264 standard and the asserted claims of the '663 patent are not coterminous.

To the contrary, the evidence shows that there are many ways to decode the UEG(k) syntax elements under the H.264 standard without practicing the asserted claims of the '663 patent. RX-2814C at QA 172. For instance, claim 1 of the '663 patent recites the following three-step algorithm for generating an index value from a codeword:

1. setting said index value to a threshold in response to a first portion of said codeword having a first pattern;
2. adding an offset to said index value based on a second pattern in a second portion of said codeword following said first portion in response to said first portion having said first pattern; and
3. adding a value to said index value based on a third pattern in a third portion of said codeword following said second portion in response to said first portion having said first pattern. JX-0007 at claim 1.

Many other algorithms distinct from the claim 1 algorithm are able to generate an index value from a codeword as required by the H.264 standard. RX-2814C at QA 172. For example, one does not need to set the index value to a threshold as recited in claim 1. Rather, one could evaluate the bits of the codeword sequentially and simply accumulate the index value based on the evaluation of those bits. *Id.* at RX-2814C.0432-33. Moreover, one could rely on "lookup tables" to generate portions (or all) of an index value rather than setting an index value and adding different values correlating to the codeword. *Id.* Furthermore, one could combine the "offset" and "value" numbers identified in the claim 1 algorithm and then add to a pre-set threshold rather than separately adding the "offset" and "value" as required by the asserted claims. *Id.*

Complainants also attempted to establish infringement of the accused products by showing that the H.264 "reference software" practices the asserted claims. Compls. Br. at 222-242. However, there is no evidence that the accused products make use of the reference software. In fact, there is no evidence that any commercial decoder uses or has ever used the H.264 reference software. Complainants merely suggest, without any support whatsoever, that the reference software is the "presumptive method" for decoding H.264 streams. *Id.* at 221-22. Complainants later admit, however, that the ITU merely provides the software as an aid to assist in the implementation of decoding syntax elements encoded using UEGk binarization. *Id.* at 363. As such, the use of the H.264 reference software is optional, and there is no evidence that any Respondent—or any other company, for that matter—has ever used or relied on the software.[32]

The ID therefore correctly concluded that practicing the UEGk decoding required by the H.264 standard does not necessarily result in the infringement of the '663 patent. ID at 242-243.

IX. Question 12

> **Please discuss, in light of the statutory language, legislative history, the Commission's prior decisions, and relevant court decisions, including *InterDigital Commc'ns, LLC v. ITC*, 690 F.3d 1318 (Fed. Cir. 2012), 707 F.3d 1295 (Fed. Cir. 2013), and *Microsoft Corp. v. ITC*, Nos. 2012-1445, -1535 (Oct. 3, 2013), whether establishing a domestic industry based on licensing under 19 U.S.C. § 1337 (a)(3)(C) requires proof of "articles protected by the patent" (i.e., a technical prong). If so, please identify and describe the evidence in the record that establishes articles protected by the asserted patents.**

A. Introduction

The statutory language plainly requires proof of "articles protected by the patent" (i.e., a technical prong) for any type of domestic industry, *including* one based on licensing investments under 19 U.S.C. § 1337 (a)(3)(C). This requirement cannot be satisfied by merely pointing to the articles accused of infringement in a Section 337 proceeding. This interpretation not only consistent

[32] Not only is the IEEE reference software not used in any of the accused products, but moreover Dr. Schonfeld demonstrated in detail that the H.264.2 reference software differs significantly from asserted claims of the '663 patent. *See* RX-2814C at QA 210-26.

with the legislative history and the Commission's early interpretation of the statutory language, it has also been more recently endorsed by the Federal Circuit.

Funai understands that the Commission has wrestled with this vitally important issue in other recent investigations. In fact, the Commission asked the parties to brief a nearly identical question in *Certain Wireless Devices with 3G Capabilities and Components Thereof*, ITC Inv. No. 337-TA-800.[33] Additionally, this precise issue was also raised before the Federal Circuit in *InterDigital Commc 'ns, LLCv. ITC*, 690 F.3d 1318 (Fed. Cir. 2012), and in the briefing before the Supreme Court for the *certiorari* petition filed in that case, Supr. Ct. Docket No. 12-1352. In *InterDigital*, the Federal Circuit held that "section 337(a)(3) makes clear that the required United States Industry can be based on patent licensing alone; it does not require that the articles that are the objects of the licensing activities (i.e., the "articles protected by the patent") be made in this country." 690 F.3d at 1329. In an opinion on a petition for rehearing, the panel majority further clarified that "the research and development or licensing activities referred to in subparagraph (C) must also exist with respect to articles protected by the patent, such as by licensing protected products." *InterDigital*, 707 F.3d 1295, 1298 (Fed. Cir. 2013) (Op. on Petition for Rehearing). Nonetheless, the panel majority found that this requirement was satisfied in that case because "the patents in suit protect the technology that is, according to InterDigital's theory of the case, found in the products that it has licensed and that it is attempting to exclude." *Id.* at 1299. Funai submits that, insofar as the *InterDigital* majority held that the requirement of "articles protected by the patent" can be satisfied by merely pointing to the allegedly infringing products that a complainant is seeking to exclude and/or by simply relying upon the complainant's "theory of the case" (with nothing more) that the patented technology is found in

[33] The Commission has extended the target date for completion of the 800 investigation to December 19, 2013. Funai therefore requests the opportunity to supplement its briefing on this issue once the public version of the Commission's opinion in the 800 investigation becomes available.

licensed products, that holding is inconsistent with both the clear statutory language as well as the Commission's and the Federal Circuit's own prior statements as to what the law requires.

More recently, however, in *Microsoft Corp. v. ITC*, Nos. 2012-1445, -1535 (Fed. Cir. Oct. 3, 2013), the Federal Circuit has unequivocally confirmed that a separate proof of "articles protected by the patent" is required for satisfaction of the domestic industry requirement, and that this requirement cannot be met by merely pointing to the accused products. In particular, the Federal Circuit noted:

> Section 337, though not requiring that an article protected by the patent be produced in the United States, ***unmistakably requires that the domestic company's substantial investments relate to actual "articles protected by the patent."*** 19 U.S.C. §§ 1337(a)(2), (3). A company seeking section 337 protection must therefore provide evidence that its substantial domestic investment—*e.g.*, in research and development—***relates to an actual article that practices the patent, regardless of whether or not that article is manufactured domestically or abroad***.

slip. op. at 11 (emphasis added).

Based on this rationale, the Federal Circuit affirmed the Commission's determination that the complainant (Microsoft) did not satisfy the domestic industry requirement with respect to two of the asserted patents in *Certain Mobile Devices, Associated Software, and Components Thereof*, ITC Inv. No. 337-TA-744. Although the *Microsoft* case did not deal with a licensing domestic industry, its rationale is equally applicable to the question presented here.

Indeed, the Commission itself appears to agree that articles protected by the patent must also be proven for satisfaction of a domestic industry based on licensing under subparagraph 337(a)(3)(C). As noted in the Federal Government's brief to the Supreme Court in the *InterDigital* case:

> [J]ust as the 'plant or equipment' referred to in subparagraph (A) must exist with respect to articles protected by the patent, such as by producing patented goods, the research and development or *licensing activities referred to in subparagraph (C) must also exist with respect to articles protected by the patent, such as by licensing protected products*.

Nokia v. ITC, Supr. Ct. Docket No. 12-1352, Brief for the Federal Respondent (ITC) in Opposition at 11 (hereinafter "Comm'n Cert. Br.") (emphasis added). The Commission, however, went astray in

the *InterDigital* case (as did the panel majority) by taking the position that this statutory requirement ("articles protected by the patent") could be satisfied by the products accused of infringement in a Section 337 investigation.

As further explained herein, the statutory language, the legislative history, the Commission's prior decisions, as well as relevant decisions by the Federal Circuit all support the conclusion that, as the other types of domestic industries recognized by the Commission, one that is based on substantial investments in licensing also requires satisfaction of the "technical prong" with respect to articles protected by the patent. This requirement cannot be satisfied by merely pointing to the products that a complainant accuses of infringement (and seeks to exclude in a Section 337 proceeding). Nor can it be satisfied without sufficient proof that the products manufactured by a complainant or its licensees practice at least one claim of the asserted patent.

B. The Language of the Statute Unambiguously Requires Articles Protected by the Patent that Are Distinct from the Accused Products

The text of Section 337 is clear, and should be the primary basis for the Commission's interpretation of the domestic industry requirement. *Chevron, U.S.A., Inc. v. Natural Resources Defense Council, Inc.*, 467 U.S. 837, 842-43 (1984) ("If the intent of Congress is clear, that is the end of the matter; for the court, as well as the agency, must give effect to the unambiguously expressed intent of Congress."). Indeed, the statutory language states not once, but ***twice***, that there must be "articles protected by the patent." First, Section 337(a)(2) authorizes the Commission to prohibit the importation of allegedly infringing articles "only if an industry in the United States, ***relating to the articles protected by the patent*** . . . concerned, exists or is in the process of being established." 19 U.S.C. § 1337(a)(2) (emphasis added). Next, Section 337(a)(3) further provides:

> (3) For purposes of paragraph (2), an industry in the United States shall be considered to exist if there is in the United States, ***with respect to the articles protected by the patent***, copyright, trademark, mask work, or design concerned—
>
> (A) significant investment in plant and equipment;
>
> (B) significant employment of labor or capital; or

> (C) substantial investment in its exploitation, including engineering, research and development, or licensing.

19 U.S.C. § 1337(a)(3) (emphasis added). The statutory language does not carve out an exemption for a domestic industry based on licensing, but instead applies the requirement to all three subparagraphs of Section 337(a)(3).

As these provisions make clear, the domestic industry requirement can only be satisfied if the investments are tied to specific articles that practice the patents at issue, *i.e.*, the "technical prong." Moreover, those articles must be "protected," in the sense that they must be either manufactured or licensed under the asserted patents by the complainant, and therefore cannot be satisfied by merely pointing to *unlicensed* products that are accused of infringement in the very same proceeding (or elsewhere). As such the phrase "protected by the patent" clearly requires articles that not only practice the patent (by satisfying the limitations of at least one claim), but that those articles are sanctioned by the patent holder, *i.e.*, manufactured and sold by the complainant or an authorized licensee.

It would therefore be erroneous to read the "articles protected by the patent" language to extend to the allegedly infringing articles the Commission is being asked to exclude from import. Congress's intent was made clear by its choice of words. The statute clearly distinguishes articles that infringe the patent when describing unfair acts from articles protected by the patent when describing the requisite domestic industry. *Compare* 19 U.S.C. § 1337(a)(1)(B) ("importation . . . of articles that . . . infringe . . .") *and id.* § 1337(a)(1)(C) (". . . importation . . . of articles that infringe . . .") *with id.* § 1337(a)(2) ("an industry in the United States, relating to the articles protected by the patent") *and id.* § 1337(a)(3) ("an industry in the United States . . . with respect to articles protected by the patent . . . "). There is simply no statutory basis for the position that Congress referred to the same articles when it—separately—required imported articles that infringe a patent to establish an unfair act and articles that are protected by the patent to form the domestic industry. The statute

makes clear that the two types of articles cannot be the same thing and that one was not meant to substitute for the other. *See Abbott v. Abbott*, 560 U.S. 1, 55 (2010) ("In interpreting statutory text, we ordinarily presume that the use of different words is purposeful and evinces an intention to convey a different meaning.").

The article that is the subject of the exclusion proceeding cannot be simultaneously the "article protected by the patent." Indeed, by definition, such unauthorized articles do not enjoy patent protection, which is why the complainant asks the Commission to exclude them. Because an article cannot be both unfairly imported and authorized for importation under a license, the phrase "articles protected by the patent" must refer to articles other than the allegedly infringing products. Additionally, to base the test on whether the accused products infringe the asserted patents effectively eliminates this as an independent proof element—complainants only assert patents that they have a good faith belief are infringed and relief is only granted if such infringement is proven.

Furthermore, subparagraph (C) specifies that the substantial investment must be in "its exploitation" through engineering, research and development, or licensing activities. As recognized in a prior Commission decision, "[t]he word 'its' before the word 'exploitation' in (C) must refer to exploitation of the patent (because it is singular) rather than to exploitation of 'articles protected by the patent' (which are plural)." *Certain Microcomputer Memory Controllers, Components Thereof, and Products Containing Same*, ITC Inv. No. 337-TA-331, Initial Determination, 1992 ITC LEXIS 19. *9 (Jan. 8, 1992). While this construction may be grammatically correct, it does little to explain or interpret the statutory requirement that even investments under subparagraph (C) must still be with respect to "articles protected by the patent." Indeed, the use of the term "exploitation" reinforces that more than "licensing alone" is required to satisfy the domestic industry requirement under this provision, since "exploitation" means that a technology covered by the patent is "put into practical use." *Air Turbine Tech., Inc. v. Atlas Copco AB*, 410 F.3d 701, 711 (Fed. Cir. 2005). That view of the text, moreover, is reinforced by § 337(a)(3)(C)'s use of the terms "engineering," and "research

and development," which clearly relate to tangible goods intended for practical use—in short, "articles protected by the patent," which "licensing alone" does not reach.[34]

C. The Legislative History Confirms the Statutory Language Requiring Proof of Articles Protected by the Patent

If there was any doubt as to what the statutory language requires, the legislative history surrounding the 1988 amendments to Section 337 unequivocally confirms that there must be articles protected by the patent. Congress added Section 337(a)(3)(C) in 1988 as part of an overhaul of section 337. That specific provision was enacted in response to a series of ITC decisions, chief among them *Certain Products with Gremlins Character Depictions*, ITC Inv. No. 337-TA-201, USITC Pub. 1815 (Sept. 12, 1985), where, in Congress' view, "the Commission ha[d] interpreted the domestic industry requirement in an inconsistent and unduly narrow manner." H.R. Rep. No. 100-40, at 157 (1987); *see also* 132 Cong. Rec. H1783 (Apr. 10, 1986) (primary House sponsor noting "the unfortunate results which have occurred in some recent cases, such as *Gremlins*").

In the *Gremlins* investigation, the ALJ initially found that the complainant copyright holder had "licensed 48 domestic companies to produce a wide variety of goods containing GREMLINS character depictions [including] hats, lunch boxes, painter caps, jerseys, posters, 'Colorforms,' playsets, toy cars, card games, patterns for costumes, blankets, baby sleepers, records, pajamas, and

---

[34] In the *InterDigital* case, the complainant argued that "'licensing,' just like 'research and development' and 'engineering,' can —and often does—cover products *before* they are actually manufactured." *See Nokia v. ITC*, Supr. Ct. Docket No. 12-1352, Brief for the InterDigital Respondents in Opposition at 16 (hereinafter "InterDigital Cert. Br."). While this may be true, the research and development and engineering activities must still result in the commercialization of an article protected by the patent, as recognized by the Federal Circuit in the recent *Microsoft* case. *See Microsoft.*, Case Nos. 12-1445, -1535, slip. op. at 11. Of course, if the article under development has not yet been commercially released, but there are tangible steps being taken towards commercialization, the statute allows for the requirement to be satisfied based on a domestic industry "in the process of being established." 19 U.S.C. § 1337(a)(2). Similarly, it follows that any licensing activities must also lead to articles protected by the patent in order to satisfy the statutory requirement. It cannot be presumed, however, that granting a portfolio license that includes several patents will necessarily lead to articles that practice the particular patent(s) asserted in an investigation.

puffy stickers, to name just a few." *Gremlins, ITC Inv. No. 337-TA-201 (Sept. 12, 1985) (Initial Determination)*, 1985 ITC LEXIS 20, *27-28. At least 31 of those companies engaged in relevant manufacturing activities within the United States. *Id.* at *28. Thus, the case actually involved "articles protected by the patent, copyright, [or] trademark." 19 U.S.C. § 1337(a)(2), (3). The full Commission reversed the ALJ's initial determination, holding that "the licensing activities of Warner with respect to the 'Gremlins copyrights' do not constitute a domestic industry under section 337." 1986 ITC LEXIS 313. It was this type of product-focused licensing industry, rejected by the Commission in the *Gremlins* case, which Congress sought to restore by amending the statute.

Likewise, the other patent-based investigations that prompted Congress's "concern" also involved actual articles that embodied the relevant intellectual property. *See* H.R. Rep. 100-40, at 157; 132 Cong. Rec. 30,810, 30,816 & n.6 (Oct. 14, 1986) (statement of Rep. Kastenmeier); *Certain Modular Structural Systems*, ITC Inv. No. 337-TA-164, 1984 ITC LEXIS 202 (1984) (noting that "[t]he Commission has a longstanding practice of defining the industry in an intellectual-property-based section 337 case in terms of the article or articles resulting from the exploitation of the involved intellectual property right, a principle which was recently upheld by our reviewing court"); *Certain Limited-Charge Cell Culture Microcarriers*, ITC Inv. No. 337-TA-129, 1984 ITC LEXIS 234 (1984) (noting that "it is not disputed that SUPERBEAD microcarriers come within the claims of the '654 patent," and "[a]ll of complainants' SUPERBEAD microcarriers are manufactured in Scotland, by Flow Laboratories, Ltd. [the exclusive licensee]"); *Certain Miniature, Battery-Operated, All Terrain, Wheeled Vehicles*, ITC Inv. No. 337-TA-122, 1982 ITC LEXIS 216 (1982) ("*Miniature Toy Vehicles*"), *aff'd sub nom. Schaper Mfg. Co. v. ITC*, 717 F.2d 1368, 1373 (Fed. Cir. 1983) (finding no domestic industry even though the complainant was engaged in research and development activities in the United States and granted a license to another complainant to manufacture and sell toy vehicles and accessories).

In each example cited in the legislative history where the Commission had found no domestic industry under the prior statute—*i.e.*, the cases that were criticized for defining domestic industry too narrowly—the complainants had arranged for the manufacture of articles embodying their IP rights, and in each example, the available records indicate that the licenses were granted *ex ante* and promoted the new production of articles. While some of the articles may have been manufactured abroad, they were nonetheless articles that were sanctioned for sale in the United States by the patent-holder or its licensee, and therefore would have qualified as "articles protected by the patent." That critically undermines the notion that the 1988 amendment was designed to expand the ITC's authority to cover "licensing alone"—*i.e.*, licensing divorced from actual articles protected by patents—since that was not an issue in the cases Congress found problematic.

Furthermore, the legislative history reveals that Congress considered (and rejected) a revision to section 337 that would have eliminated the need to show "articles protected by the patent." In particular, Congress considered a version of that provision with the language "protected by the . . ." omitted. *See* H.R. 3, 100th Cong. § 142 (as introduced in the House, Jan. 6, 1987) (stating that "an industry in the United States shall be considered to exist if there is in the United States, with respect to the articles, patent, copyright, trademark, trade secret, or mask work concerned . . . (C) substantial investment in its exploitation, including engineering, research and development, or licensing"). This rejected phrasing might have supported a one-prong domestic industry test in which only showing a substantial investment with respect to the patent, and not any articles, would have sufficed. But that is *not* the statute Congress passed. Rather, Congress passed a statute that required a showing of investments "with respect to the articles protected by the patent."

In the final House and Senate Reports for the 1988 statutory amendments, Congress noted the following with respect to the amended statutory domestic industry requirement:

> The Committee is concerned, however, that in some recent decisions the Commission has interpreted the domestic industry requirement in an inconsistent and unduly narrow manner. In order to clarify the industry standard, a definition is included

> which specifies that an industry exists in the United States *with respect to a particular article* involving an intellectual property right if there is, in the United States,-
>
> 1. significant investment in plant and equipment;
> 2. significant employment of labor or capital; or
> 3. substantial investment in the exploitation of the intellectual property right including engineering, research and development or licensing.
>
> The first two factors in this definition have been relied on in some Commission decisions finding that an industry does exist in the United States. The third factor, however, goes beyond ITC's recent decisions in this area. This definition does ***not*** *require actual production of the article in the United States* ***if it can be demonstrated that significant investment and activities of the type enumerated are taking place in the United States***. Marketing and sales in the United States alone would not, however, be sufficient to meet this test. The definition could, however, encompass universities and other intellectual property owners who engage in extensive licensing of their rights ***to manufacturers***.

H.R. Rep. No. 100-40, at 157 (1987) ("House Report") (emphasis added); see also S. Rep. No. 100-71, at 129 (1987) ("Senate Report"). The House and Senate Reports further note "[t]he mere ownership of a patent or other form of protection would not be sufficient to satisfy this test," and "[t]he owner of the property right must be actively engaged in steps leading to the exploitation of the intellectual property, including application engineering, design work, or other such activities." *Id.* Accordingly, although Congress did not require the production of articles "in the United States," it is clear from the legislative history that there must nonetheless be *some* authorized production of articles (in the United States or abroad) that related to the types of investments in the exploitation of the intellectual property that set forth under the third factor.

Allowing the accused products to serve double-duty as both the basis for exclusion and the domestic industry to be protected eliminates the technical prong requirement. This conflicts with the policy that the Commission has stated the domestic industry rule serves: "as a gatekeeper to prevent excessive use of the ITC under Section 337." *Certain Stringed Musical Instruments & Components Thereof*, ITC Inv. No. 337-TA-586, Initial Determination, at 25 (Dec. 3, 2007). Indeed, such a rule makes it much easier for a company with *no* domestic manufacturing operations to bring cases to the

ITC than one that makes products in the United States and seeks to protect those domestic manufacturing jobs. That surely cannot be what Congress intended.

D. Prior Commission Decisions Should Not Be Read as Eliminating the Technical Prong Requirement for a Licensing Domestic Industry

Although some more recent unreviewed ALJ determinations have suggested that satisfaction of the technical prong is not required for a licensing-based domestic industry, the Commission has not always embraced that viewpoint. In *Certain Integrated Circuit Telecommunication Chips & Products Containing Same Including Dialing Apparatus*, ITC Inv. No. 337-TA-337, USITC Pub. 2670, Initial Determination (Aug. 1993), the Commission squarely rejected the argument that the domestic industry requirement is satisfied "based on [a] complainant's licensing . . . activities." *Id.* at 99 n.87. That conclusion, the Commission explained, is compelled by the statutory text: "[s]ection 337(a)(2) requires that the domestic industry relate to the articles protected by the patent." *Id.* This early interpretation is fully consistent with the Commission's approach of requiring a showing that the other types of exploitation under subparagraph (C), such research and development, also must relate to articles protected by the patent. *See, e.g.*, *Certain Mobile Devices, Associated Software, and Components Thereof*, ITC Inv. No. 337-TA-744, Comm'n Op. at 8-14 (June 4, 2012) (finding that complainant did not satisfy domestic industry requirement based on technical prong even though R&D investments were alleged under subparagraph (C)); *Certain Dynamic Sequential Gradient Compression Devices and Component Parts Thereof*, ITC Inv. No. 337-TA-335, USITC Pub. 2575, Initial Determination at 61-65 (Nov. 1992).

Over time, however, some of the Commission's ALJs decided to exempt licensing from the "articles protected by the patent" requirement. For example, in *Certain Digital Satellite System (DSS) Receivers and Components Thereof*, ITC Inv. No. 337-TA-392, the ALJ found that "the statute does not require a complainant to manufacture the patented product nor does it require that a complainant show that a product covered by the [asserted] patent is made by complainant's

licensees." Initial Determination (Public Version) at 9-12, U.S.I.T.C. Pub. 3418 (April 2001). In support of this interpretation, the ALJ cited the House and Senate Reports for the 1988 amendments, but, as noted above, those reports only indicated that a domestic industry based on the third factor (C) "does not require actual production of articles ***in the United States***." House Report at 157 (emphasis added); Senate Report at 129. The ALJ did not cite to anything in the legislative history or prior Commission decisions suggesting that the requirement of "articles protected by the patent" is eliminated altogether when a complainant relies upon licensing for its domestic industry.[35]

Likewise, in *Certain Semiconductor Chips with Minimized Chip Package Size and Products Containing Same*, ITC Inv. No. 337-TA-432, the ALJ granted a summary determination motion finding a domestic industry based on licensing without proof of articles protected by the patent. Order No. 13 (Public Version) at 13 (unreviewed Initial Determination) (June 6, 2002). The ALJ's basis for this conclusion was that "[t]he word 'its' cannot refer to the 'articles' protected by the patent. Because of the singular nature of the word 'its,' it must refer to the singular noun 'patent,' or one of the other forms of intellectual property, which are all enumerated in the singular by section 337(a)(3). The ALJ, however, did not explain why the requirement in subparagraph (C) that there must be an "exploitation" of the patent eliminates the separate requirement of "articles protected by the patent" that is applicable to all three subparagraphs. Indeed, the "exploitation" requirement is

[35] The ALJ in the *DSS Receivers* case cited to *Certain Microsphere Adhesives, Process for Making Same, and Products Containing Same, Including Self-Stick Repositionable Notes*, ITC Inv. No. 337-TA-366, Comm'n Op. at 24 (Jan. 16, 1996) for the proposition that "[t]he Commission has held that a complainant may satisfy the domestic industry requirement of section 337 by showing that the domestic industry exploits the <u>patent</u> in issue, and that a complainant is not required to establish that it practices asserted claims." *DSS Receivers*, Initial Determination (Public Version) at 11 (emphasis in original). However, in the cited *Microsphere Adhesives* opinion, the Commission only addressed the question of whether a complainant must practice the same claims as those asserted against the respondent. ITC Inv. No. 337-TA-366, Comm'n Op. at 13-16, USITC Pub. 2949. That decision does not suggest elimination of the statutory requirement of "articles protected by the patent" for licensing domestic industry, and in fact reinforces the notion that the complainant must practice at least one claim (*any* claim) of the asserted patent in order to satisfy the domestic industry requirement.

equally applicable to investments in engineering, and research and development under subparagraph (C), but the Commission and the Federal Circuit have nonetheless found that a domestic industry based on those types of activities still require satisfaction of the technical prong.

Unfortunately, the domestic industry determinations in *DSS Receivers* and *Semiconductor Chips* were left unreviewed by the Commission, and the flawed interpretation of the statutory requirement has been carried through into later investigations, including this one. The Commission, however, has never definitively eliminated the technical prong for a licensing-based domestic industry.[36] In fact, in *Certain Multimedia Display and Navigation Devices and Systems, Components Thereof, and Products Containing Same*, where the Commission clarified the requirements for a licensing domestic industry, the Commission expressly declined to reach the question of the applicability of the technical prong to a domestic industry claim based on licensing, noting that the "issue is beyond the scope of review in this investigation." Inv. No. 337-TA-694, Comm'n Op at 7 n.3. The Commission nonetheless recognized that "a potentially important consideration is whether the licensee's efforts relate to 'an article protected by' the asserted patent under section 337(a)(2)-(3), and "if a licensee's product is an 'article protected by' the patent, then

---

[36] In *Certain Stringed Musical Instruments and Components Thereof*, the Commission stated that:

> With respect to section 337(a)(3)(A) and (B), the technical prong is the requirement that the investments in plant or equipment and employment in labor or capital are actually related to "articles protected by" the intellectual property right which forms the basis of the complaint. . . . With respect to section 337(a)(3)(C), the technical prong is the requirement that the activities of engineering, research and development, and licensing are actually related to the asserted intellectual property right.
> ITC Inv. No. 337-TA-586, Comm'n Op. at 13-14, USITC Pub. 4120 (Dec. 2009).

However, this is only *dicta* since, in that Investigation, both the Commission and the ALJ only addressed the economic prong of the domestic industry requirement. Moreover, to treat the technical prong differently for subparagraph (C) than subparagraphs (A) and (B) would contravene both the statutory language and Commission precedent requiring proof of articles protected by the patent for a domestic industry based on research and development investments under subparagraph (C).

the license is ***by definition*** connected to that patent." *Id.* at 10 (emphasis added). Funai, however, respectfully submits that the requirement for "articles protected by the patent" is not merely one "consideration" that must be taken into account, it a critical statutory requirement that must be satisfied in addition to the other "nexus" factors set forth in the Commission's *Navigation Devices* opinion. The Commission should take the opportunity to make that clear in this Investigation.

E. The Federal Circuit Has Recognized the Applicability of the "Articles Protected By the Patent" Requirement to Subparagraph (C)

The Federal Circuit has unequivocally recognized that the requirement of "articles protected by the patent" (*i.e.*, the technical prong) must be met in order to satisfy the domestic industry requirement. As noted by the court:

> A requirement of a patent-based section 337 action is that a domestic industry "relating to the articles protected by the patent . . . exist[] or [be] in the process of being established." 19 U.S.C. § 1337(a)(2). To determine whether an industry relates to the protected articles (the "technical prong" of the domestic industry requirement), the Commission examines whether the industry produces articles covered by the asserted claims. The test for satisfying the "technical prong" of the industry requirement is essentially same as that for infringement, i.e., a comparison of domestic products to the asserted claims.

Alloc, Inc. v. ITC, 342 F.3d 1361, 1375 (Fed. Cir. 2003); *see also Crocs, Inc. v. ITC*, 598 F.3d 1294, 1307 (Fed. Cir. 2010) ("In other words, the technical prong requires proof that the patent claims cover the articles of manufacture that establish the domestic industry. Put simply, the complainant must practice its own patent."). There is simply no basis not to apply this same requirement for a domestic industry based on licensing.

In the *InterDigital* case, the Federal Circuit recognized that "just as the 'plant or equipment' referred to in subparagraph (A) must exist with respect to articles protected by the patent, such as by producing protected goods, the research and development or licensing activities referred to in subparagraph (C) must also exist with respect to articles protected by the patent, such as by licensing protected products." 707 F.3d at 1298. "This accords with the common description of the domestic industry requirement as having two 'prongs': the 'economic prong,' which requires that there be an

industry in the United States, and the 'technical prong,' which requires that the industry relate to articles protected by the patent." *Id.* These statements of the law are correct. However, while paying lip service to the notion that a licensing domestic industry also requires proof of articles protected by the patent, the panel majority in the *InterDigital* case failed to apply the "technical prong" in the manner traditionally applied in prior Commission and Federal Circuit decisions, *i.e.*, by requiring proof that the complainant or its licensee's products meet the limitations of at least one claim of the asserted patent. Instead, the court found that the requirement was satisfied because "InterDigital had 24 revenue-producing licenses to its U.S. patents, including the patents at issue, with major manufacturers of wireless devices, including Samsung, LG, Matsushita, Apple, and RIM." *Id.* at 1299. But the fact that InterDigital had licenses with wireless device manufacturers does not indicate one way or another whether any of those manufacturers' products actually practiced the patents at issue.

Both the panel majority and the dissent in the *InterDigital* case focused on the red herring issue of whether any articles must be manufactured in the United States in order to satisfy the domestic industry requirement. *See* 690 F.3d at 1329 (noting that "section 337(a)(3) makes clear that the required United States industry can be based on patent licensing alone; it does not require that the articles that are the objects of the licensing activities (*i.e.*, the 'articles protected by the patent') be made in this country"); 707 F.3d at 1304 (Newman, J., dissenting) ("The panel majority erred in holding that the domestic industry requirement is met by licensing the importation of foreign-made products."). It is not Funai's position that "articles protected by the patent" must be made in the United States. Rather, the statute allows the domestic industry articles to be manufactured in another

country, as long as they are authorized under the patent for use in the United States, *e.g.*, through a license granted by the complainant.[37]

Moreover, in assessing a domestic industry allegation under subparagraph (C) based on litigation expenditures, the Federal Circuit has stated that a complainant's investments in litigation "could indeed satisfy the economic prong of the domestic industry requirement if it was substantial and directed toward a licensing program that ***would encourage adoption and development of articles that incorporated [complainant's] patented technology***." *Motiva, LLC v. ITC*, 716 F.3d 596, 600 (Fed. Cir. 2013) (emphasis added). In *Motiva*, the court affirmed the Commission's determination of no domestic industry because the complainant "was never close to launching a product incorporating the patented technology—nor did any partners show any interest in doing so, for years before or any time after the launch of the [respondent's accused product]." *Id.* at 601. Furthermore, the complainant's "only remaining prototype was a product far from completion, and a multitude of development and testing steps remained prior to finalizing a product for production." *Id.* Moreover, the court noted that "the evidence demonstrated that [complainant's] litigation was targeted at financial gains, not at encouraging adoption of [complainant's] patented technology." *Id.* Consequently, at least when the alleged licensing domestic industry is based on litigation expenditures, the Federal Circuit has required proof that the investments encouraged the adoption and commercialization of the patented technology. *Id*. ("As the ALJ reasonably found, Motiva's old development activities did not result in ***production-ready technology that would have been incorporated into domestic goods practicing the patents*** through Motiva's licensing activities in which it was engaged at the time it filed its complaint.") (emphasis added). The Commission should

[37] Nor can the statutory requirement be satisfied by merely pointing to the fact that "the patent covers the article that is the subject of the exclusion proceeding." *InterDigital*, 707 F.3d at 1304. The articles that are the subject of the exclusion proceeding are the ones that are accused of infringement, and therefore cannot be considered "protected by the patent" in any sense.

take a consistent approach with respect to any other type of licensing domestic industry alleged under subparagraph (C).[38]

More recently, the Federal Circuit put to rest any doubt about whether the requirement of articles protected by the patent must be satisfied for any type of domestic industry. In *Microsoft Corp. v. ITC*, the court affirmed the Commission's determination that the complainant failed to satisfy the domestic industry requirement based on its investments, which included research and development, in certain "client applications" used for the Windows Mobile operating system. The court noted that "Microsoft's failing was simple" because "Microsoft failed to show that such 'client applications' are actually implemented on any third-party mobile device." *Microsoft Corp.*, Slip. Op. at 10. The court further stated that "[t]here is no question about the substantiality of Microsoft's investment in its operating system or about the importance of that operating system to mobile phones on which it runs," but found that was not enough under the statute because "Section 337, though not requiring that an article protected by the patent be produced in the United States, unmistakably requires that the domestic company's substantial investments relate to actual 'articles protected by the patent.'" *Id.* at 11. The court further stated that "[a] company seeking section 337 protection must therefore provide evidence that its substantial domestic investment—e.g., in research and development—relates to an actual article that practices the patent, regardless of whether or not that article is manufactured domestically or abroad." *Id.* As noted by the court, "[t]he Commission did not lack substantial evidence to support its finding that Microsoft simply failed to identify any actual phones with the required components performing as required [by the asserted patents]." *Id.* Accordingly, the court concluded that there was substantial evidence to support the Commission's determination that Microsoft failed to meet the statutory requirement of a domestic industry with

[38] It is also notable that the *Motiva* court understood the *InterDigital* rehearing opinion to "clarify[] that that efforts directed toward licensing a patent can satisfy the domestic industry requirement where they would result in the production of 'goods practicing the patents.'" *Motiva*, 716 F.3d at 601 (citing *InterDigital*, 707 F.3d at 1299).

respect to articles protected by the asserted patent. Although the Microsoft case did not specifically deal with a licensing domestic industry, it clearly indicates that the technical prong must be applied when a domestic industry under subparagraph (C) is alleged.

When these Federal Circuit decisions are read as a whole, they inevitably lead to the conclusion that technical prong must be applied for any type of domestic industry, including one based substantial investments in the exploitation of the patent through licensing.

F. Complainants Failed to Prove the Existence of Any "Articles Protected by the Patent" in this Investigation

There is no evidence in this Investigation that Complainants' licensing efforts relate to any articles protected by the asserted patent. Complainants admitted that they [redacted] 216:22-217:17. Complainants license the patents in suit [redacted], yet apart from their bald assertions, Complainants failed to prove that any licensee actually practices any of the asserted patents. Indeed, Complainants' only attempt to satisfy this requirement was based on the wholly unsupported assertion that licensee [redacted] 802.11 compliant products are "more likely than not" and "highly likely" to practice the '958 and '867 (Wi-Fi) patents. The ALJ appropriately rejected this argument, noting that "[s]uch a statement is not enough to prove that the [redacted] products practice the '958 and '867 patent." ID at 331. Moreover, Complainants did not even attempt to make an argument or showing that any licensee's products practice the '663 or '087 patents. As a result, Complainants failed to establish that their licensing investments are related to any articles protected by the asserted patents, which is a critical statutory requirement for any domestic industry finding.

X. Conclusion

For the reasons discussed above, the Commission should find that:

the asserted claims of the '087 patent, properly construed (all of which expressly recite and are predicated on an invention that requires a "single memory") are not infringed by the accused downstream products, all of which feature multiple DRAMs (either 2 or 4) as well as FLASH memory;

the asserted claims of the '663 patent, properly construed, are not infringed by the Funai downstream products which do not practice even a single step of the method as claimed;

as correctly found in the Final ID, there is no infringement of any of the asserted so-called SEPs (the '663, '958 and '867 patents);

there is no direct infringement by Funai's customers of the accused downstream products, of either the '087 or '663 patent claims in issue, and no evidence to support a finding of inducement under the requirements of *Global Tech* and *Akamai*, nor any evidence of any prior knowledge by Funai of infringement (indeed there is none) of either the '087 or '663 patents;

the record evidence conclusively demonstrates and compels a finding that the '958 patent is not entitled to the claimed priority date of the '182 patent and the asserted '958 patent claims are invalid as being anticipated and/or rendered obvious over the prior art discussed above;

as to the so called SEPs (the '663, '958 and '867 patents), although Complainants are judicially estopped from contending otherwise (*i.e.*, to escape their FRAND commitments), the ALJ (in the Final ID) correctly concluded that Complainants utterly failed to prove any of the so-called SEPs are in fact standard essential; and

finally, Complainants have failed to prove (as required by § 337 (a)(3)(C)) that there are any licensee "articles protected by the patent," and hence Complainants have failed to establish a

domestic industry ("DI") for that reason alone (although Complainants' other failures to prove DI are well documented in the earlier briefing).

Dated: November 1, 2013

Respectfully submitted,

/s/ Paul Devinsky

Paul Devinsky
Ray V. Lupo
Joel M. Freed
Christopher L. May
McDERMOTT WILL & EMERY
The McDermott Building
500 North Capitol Street, Northwest
Washington, DC 20001
Telephone: (202) 756-8000
Facsimile: (202) 756-8087

Christopher D. Bright
McDERMOTT WILL & EMERY
4 Park Plaza, Suite 1700
Irvine, CA 92614-2559
Telephone: (949) 851-0633
Facsimile: (949) 851-9348

Counsel for Respondents Funai Corporation, Inc., Funai Electric Co., Ltd., P&F USA,Inc., and Funai Service Corporation

DM_US 46339856-8.086047.0018
11/1/13 2:14 PM

CERTIFICATE OF SERVICE

I, Carlos Goldie, certify that, on November 14, 2013, I caused the foregoing **PUBLIC VERSION OF FUNAI RESPONDENTS' RESPONSE TO THE NOTICE OF COMMISSION DETERMINATION TO REVIEW A FINAL DETERMINATION FINDING A VIOLATION OF SECTION 337 IN ITS ENTIRETY; SCHEDULE FOR FILING WRITTEN SUBMISSIONS ON CERTAIN ISSUES UNDER REVIEW AND ON REMEDY, BONDING, AND THE PUBLIC INTEREST – BRIEF ON DISCRETE ISSUES** to be filed through EDIS and served upon the following parties in the manner indicated below:

The Honorable Lisa R. Barton Acting Secretary U.S. International Trade Commission 500 E Street, SW, Room 112-A Washington, D.C. 20436 202-205-2000	☑ Via Electronic Filing ☐ Via First Class Mail ☑ Via Hand Delivery ☐ Via Federal Express ☐ Via Electronic Mail
The Honorable David P. Shaw Administrative Law Judge U.S. International Trade Commission 500 E Street, SW, Room 317-O Washington, D.C. 20436 Patricia.Chow@usitc.gov	☑ Via Electronic Filing ☐ Via First Class Mail ☑ Via Hand Delivery ☐ Via Federal Express ☑ Via Electronic Mail
Counsel for Complainants LSI Corporation and Agere Systems, LLC: Jordan Trent Jones Kilpatrick Townsend & Stockton LLP 1080 Marsh Road Menlo Park, CA 94025 AgereLSI-837@kilpatricktownsend.com	☐ Via Electronic Filing ☐ Via First Class Mail ☐ Via Hand Delivery ☐ Via Federal Express ☑ Via Electronic Mail
Counsel for Respondent Realtek Semiconductor Corporation: Elizabeth A. Niemeyer Finnegan, Henderson, Farabow, Garrett & Dunner, LLP 901 New York Avenue, N.W. Washington, D.C. 20001 Realtek-837@finnegan.com	☐ Via Electronic Filing ☐ Via First Class Mail ☐ Via Hand Delivery ☐ Via Federal Express ☑ Via Electronic Mail

By _/s/ Carlos Goldie_____

Carlos Goldie
IP Project Assistant
McDERMOTT WILL & EMERY LLP
500 North Capitol Street, NW
Washington, D.C. 20001